3.6 ELECTRICITY (448)

In the year 2013, Electricity was tested in two papers; paper 1(448/1) and paper 2 (448/2). Paper 1 was a theory paper which constituted 60% of the final mark while Paper 2 was a practical paper which constituted 40% of the final mark. Both papers followed the usual setting format as those of the previous years.

General Candidates Performance

The candidate's performance statistics in the KCSE electricity examination since the year 2008 are as shown in the table below.

Table 13: Candidates overall performance in the years 2008 to 2013

Year	Paper	Candidature	Maximum score	Mean score	Standard Deviation
2008	1		60	26.67	10.78
	2		40	21.83	6.64
	overall	**48**	**100**	**48.58**	**15.29**
2009	1		60	35.47	9.65
	2		40	24.08	5.66
	overall	**219**	**100**	**59.55**	**13.75**
2010	1		60	32.96	9.53
	2		40	28.56	4.33
	overall	**161**	**100**	**61.52**	**12.56**
2011	1		60	35.21	10.57
	2		40	30.17	3.99
	overall	**183**	**100**	**65.37**	**12.63**
2012	1		60	35.13	9.09
	2		40	25.47	4.29
	overall	**214**	**100**	**60.60**	**11.83**
2013	1		60	32.80	9.74
	2		40	27.28	4.19
	overall	**173**	**100**	**60.06**	**12.55**

From the table it can be observed that:

(i) The candidature decreased from 214 in the year 2012 to 173 in the year 2013.

(ii) There was a slight drop in the mean for paper 1 from 35.21 in 2012 to 35.13 in 2013.

(iii) However, the mean for Paper 2 increased from 25.47 in 2012 to 27.28 in 2013.

(iv) The overall performance experienced a slight dropped in the mean from 60.60 in 2012 to 60.06 in 2013.

3.6.1 Electricity Paper 1 (448/1)

The questions which were reported to have been poorly responded to have been analyzed with a view to pointing out candidates' weaknesses and propose suggestions on some remedial measures that would be taken in order to improve performance in future. The questions for discussions include question 2, 9, 11, 12 and 13.

Question 2

(a) State **two** reasons for using a circuit diagram when troubleshooting an electrical equipment. (2 marks)

(b) State **four** components of a bill of materials in project fabrication. (2 marks)

Weaknesses

Most candidates could not state the reasons for using circuit diagrams when trouble shooting electrical equipments and the components of a bill of materials.

Advice to teachers

Teachers are advised to give more tutorials in the topic of trouble shooting.

Expected Responses

(a) **Circuit diagram**

- Shows connection of every component.
- Shows values of components.
- Shows the position of the components.
- Shows functionality of the circuit.

(b) **Bills of materials**

- Materials/parts.
- Quantity.
- Size.
- Estimate costs.

Question 9

(a) Calculate the inductance required to cause resonance at 150 kHz when the capacitance is 1.0 pF. (2 marks)

(b) In a 240V circuit, the load current is 2·5 A. If the power factor is 0·6, calculate:

(i) apparent power;

Weaknesses

Most candidates failed to decode the value a potentiometer.

Comment Advice to teachers

Teachers are advised to give more tutorials in this area.

Expected Responses

(a) **Inductance required**

$$L = \frac{1}{4\pi^2 f^2 C}$$

$$= \frac{1}{4\pi^2 (1.5 \times 10^5)^2 (10^{-12})}$$

$$= 1.13 \times 10^{-3} H$$

$$= 1.13 \text{ H}$$

(b) (i) **Apparent power**

$= IV$

$= 2.5 \times 240$

$= 600$ VA

(ii) **True power**

= apparent power × power factor

$= 600 \times 0.6$

$= 360$ w

Question 11

Figure 4, in the next page, shows the front elevation, end elevation and an incomplete plan of an object.

(a) Complete the plan;

(b) On the isometric grid provided, draw the isometric projection of the object making X the lowest point.

(13 marks)

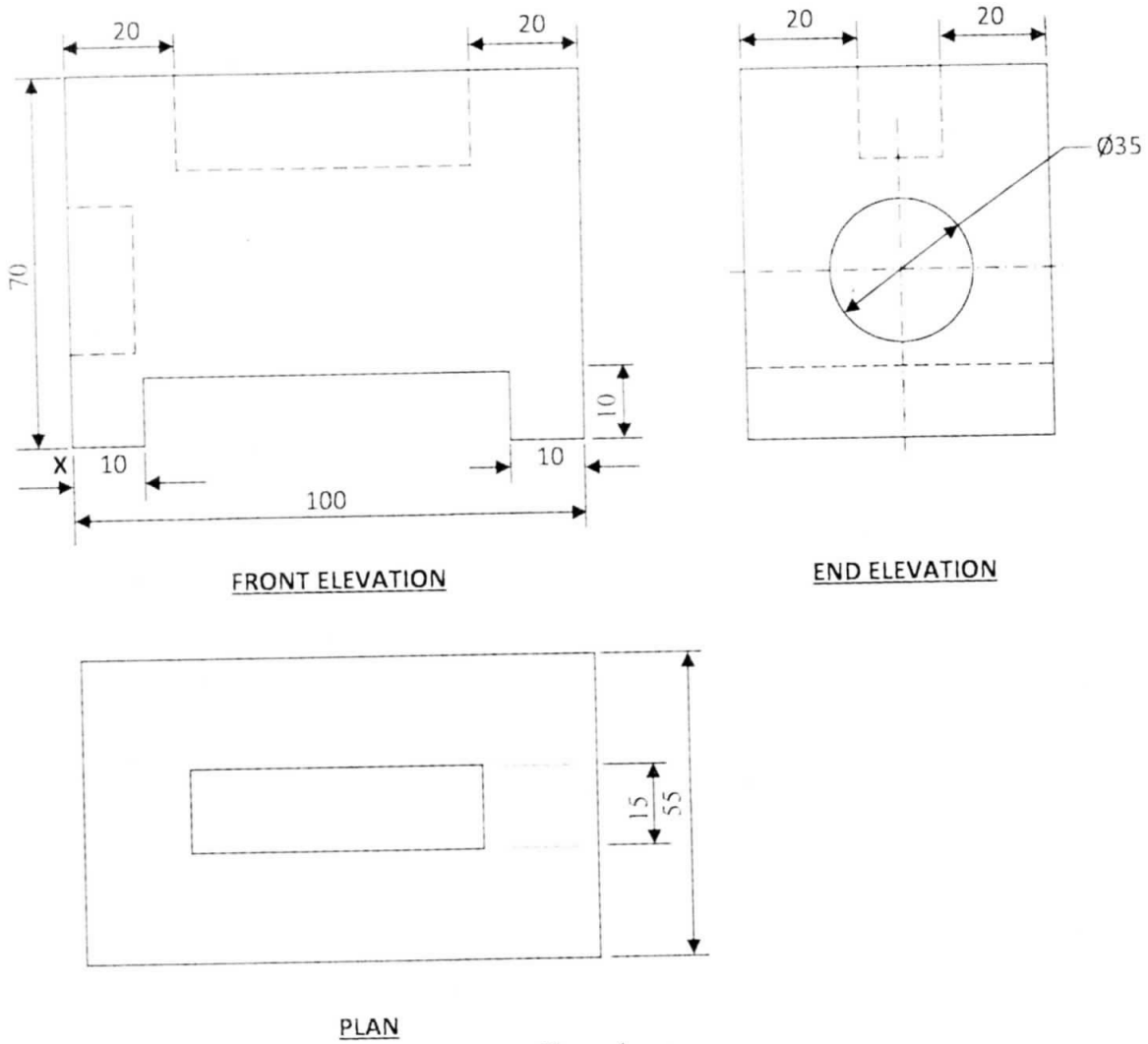

Figure 4

Weaknesses

Most candidates had problems in drawing the figure in isometric while those who tried had problems drawing the circular part.

Advice to teachers

Teachers are advised to give students more practice in drawing especially the pictorial drawings.

Expected Response

11.

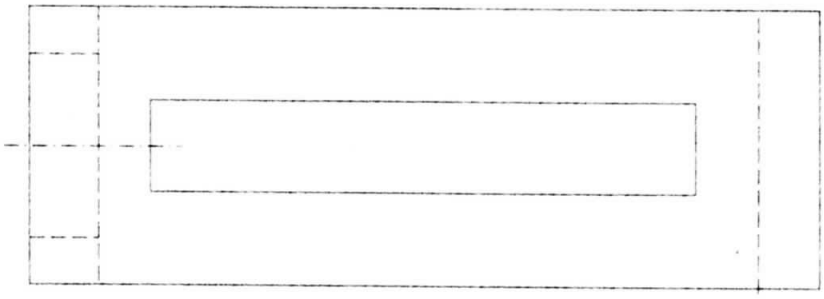

Complete Plan

Faces 2×½	=1
Hidden details=2×1	2
TOTAL	3

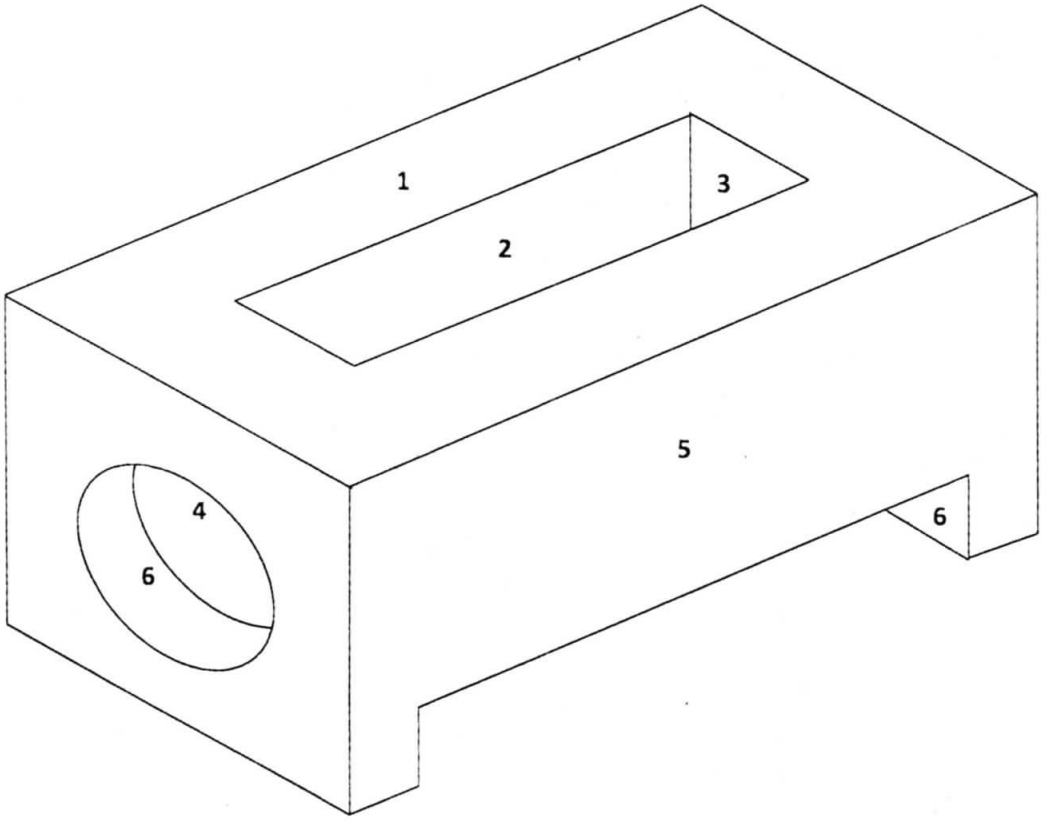

Faces 1, 5 and 7=3×½	=1½
Faces 2, 3,4,6 and 8=5×1	=5
Projection	=1
Placement of **X**	=½
Neatness	=½
TOTAL	9

Question 12

Figure 5 shows waveforms A and B. Their vertical and horizontal scales are given.

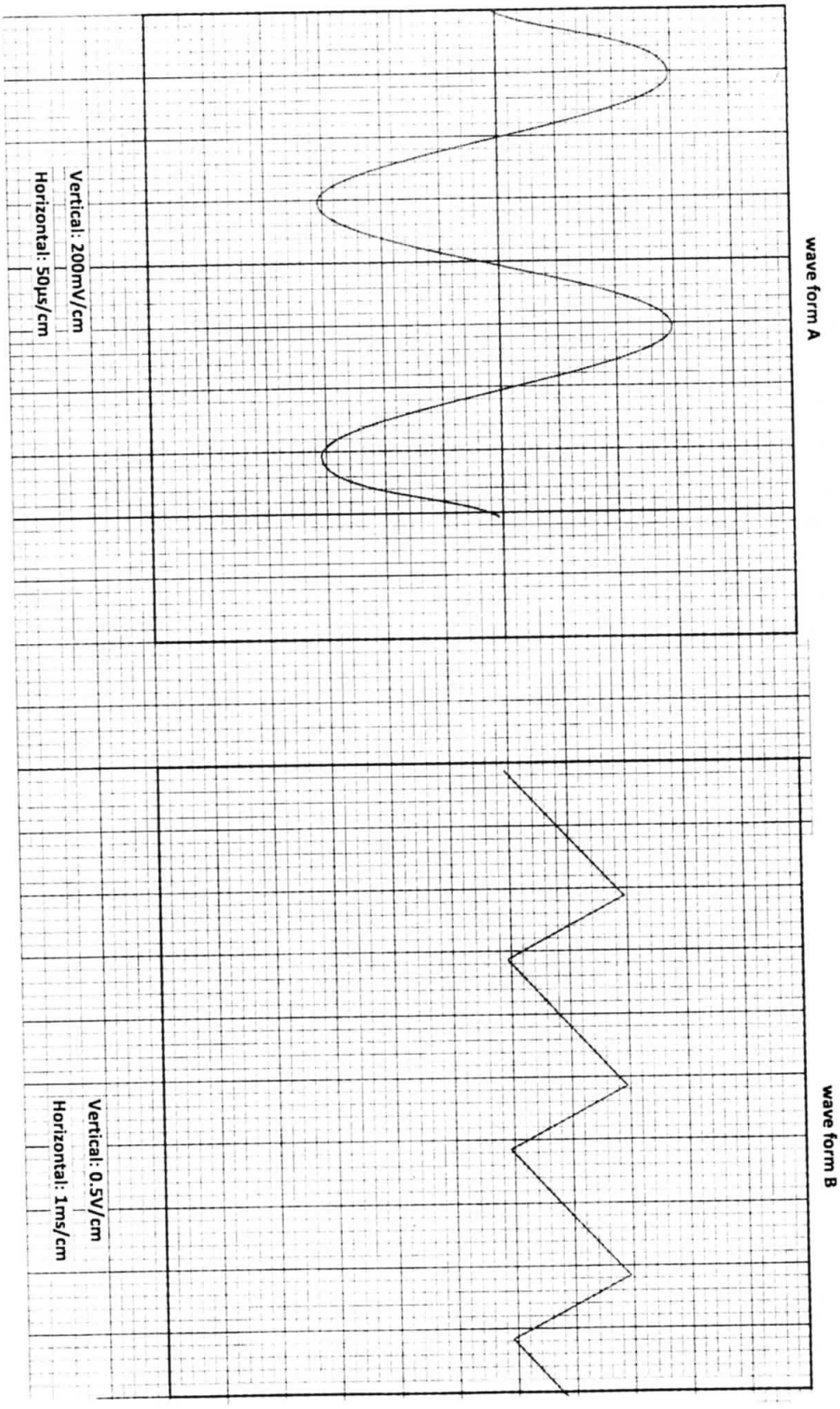

Figure 5

(a) Name each of the **two** waveforms. (1 mark)

(b) State the number of cycles displayed in each waveform. (2 marks)

(c) Calculate:

(i) frequency of waveform A;

(ii) amplitude of each waveform;

(iii) RMS voltage of waveform A.

(10 marks)

Weaknesses

Most candidates failed to name the saw tooth waveforms while some gave the solution in wrong units.

Advice to teachers

Teachers are advised to give more exercises on interpretation of waves.

Expected Responses

(a) **Name of waveforms**

A - sine wave

B - saw tooth

(b) **Number of cycles**

A - 2 cycles

B - $3\frac{1}{4}$ cycles

(c) (i) **Frequency of waveform A**

$= \frac{1}{T}$ where T = period

$T = 50\mu \times 4$

$= 200\ \mu s$

$f = \frac{1}{T} = \frac{1}{200 \times 10^{-6}} = \frac{10^6}{200}$

$= 5$ kHz

(ii) **Amplitude**

$A = V_{pk} = 200\ mV \times 3$

$= 600\ mV$

$= 0.6\ V$

$B = V_{pk} = 0.5\ V \times 2$

$= 1\ V_{pk}$

(iii) **RMS value of A**

$= 0.707 \times V_{pk}$

$= 0.707 \times 0.6$

$= 0.424\ V$

Question 13

(a) Draw a labelled diagram of a consumer unit with the following final circuits.

(i) lighting circuit;
(ii) water heater circuit;
(iii) bell circuit;
(iv) cooker circuit;
(v) ring circuit.

(11 marks)

(b) State the typical fuse ratings for any **four** of the final circuits in (a). (2 marks)

Weaknesses

Most candidates did not include all the elements of a consumer unit while other could not state the required fuse ratings for final sub circuits.

Advice to teachers

Teachers are advised give students more tutorials.

Expected Responses

(a)

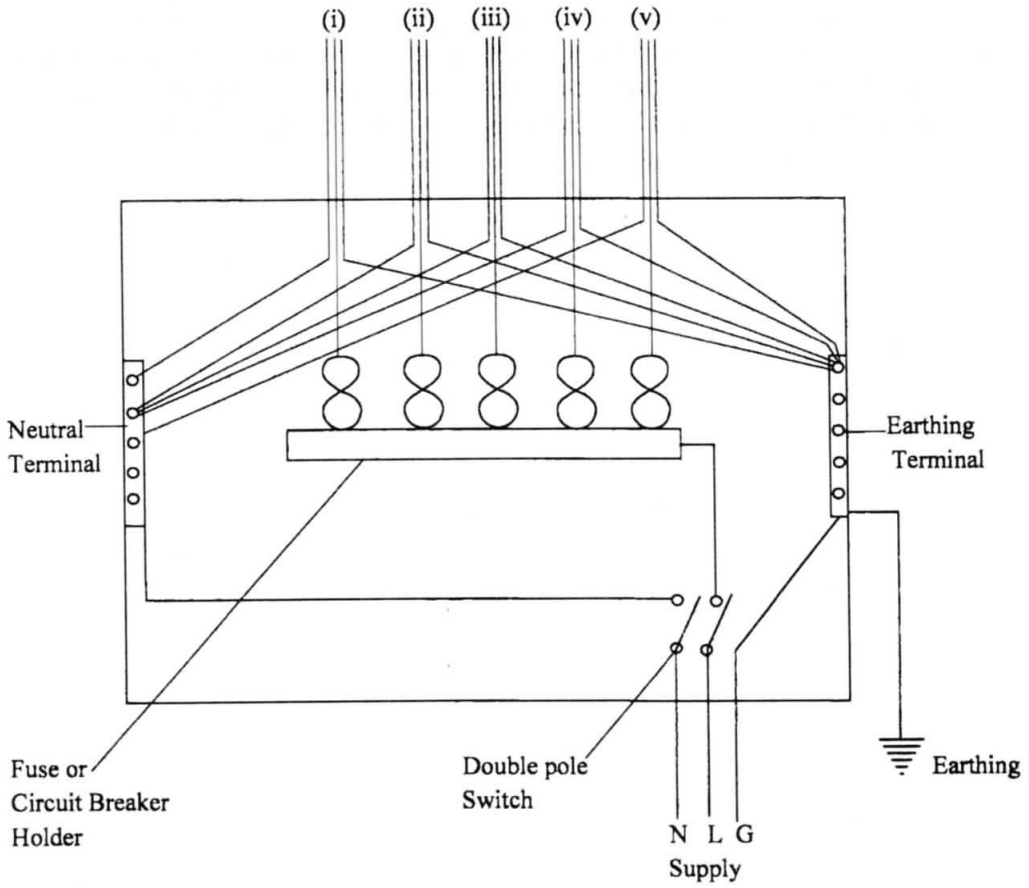

(b)	(i)	Lighting circuit	=	5 A
	(ii)	Ring circuit	=	30 A
	(iii)	Water heater	=	20 A
	(iv)	Door bells	=	5 A
	(v)	Cooker unit	=	45 A

3.6.2 Electricity Paper 2 (448/2)

The paper had 5 equally weighted compulsory exercises. It tested competencies in the following areas:

- Connecting an electric circuit as given in the diagram and setting meter ranges to measure and record the values.
- Fabricating a bracket given its development.
- Connecting the electronic circuit provided by KNEC to a DC power supply and taking readings then drawing a graph from which the resistances at maximum power transfer.
- Circuit study by taking measurements of current and voltage then using them to plot a graph then interpreting the graph.
- Domestic installation of a lighting circuit of two lamps to be controlled from one position.

Weaknesses

- The candidates had challenges completing the tasks in time.
- Plotting the curve in question 3 was challenging to quite a number of candidates
- The use of unfamiliar tools and equipment during examinations should be discouraged.
- Some candidates could not read the measuring instruments in question 4 as expected
- Teachers should teach holistically by ensuring that they cover the whole syllabus and also give more practicals by timing the students.