ALLIANCE HIGH SCHOOL
TERM II ELECTRICITY 448/1
CAT ONE PAPER 1
TIME: 2½hrs

Date of CAT:.....
Date of returning scripts:.....
Date of revising scripts:.....

100 %

NAME:.....CLASS:.....ADMNO:.....

INTRUCTIONS :

Answer all questions in section **A** and any **FOUR** in section **B**.
Candidates should have the following for this examination:

- Drawing instruments,
- Calculator / mathematical table,
- Drawing paper size A4.

All dimensions in millimeters.
Do not write on this table

SECTION A	MARKS 48
SECTION B	MARKS 52
11	
12	
13	
14	
15	

This paper consists of -17- printed pages.
Candidates should check the question paper to ensure that all the pages are printed as indicated and no questions are missing.

SECTION A (48 MARKS)

Answer **all** the questions in this section

1.(a) I – List **two** skills required of an electrical installation wireman. [1marks]

II - State **three** entry requirements for self – employment in the electrical field. [1½marks]

(b) Explain the danger posed to each of the following; [2marks]

(i) Engineer works on a rotating machine while his clothes are not buttoned,

(ii) Cable of a soldering iron placed across a pathway,

(iii) A chuck key is left on the chuck when drilling,

(iv) An engineer's divider is stored in a pocket.

2.(a) Name **three** protective devises found on a completed electrical installation and explain why they are used. [2marks]

(b) Define the following terms. [1½marks]

(i) Saturation in transistors,

(ii) Thermal runaway,

(iii)Extrinsic conduction.

3. (a) Distinguish between the following; [1marks]

(i) Resistance and reactance,

(ii) RMS value and peak value of A.C.

(b) State two factors which influence the choice of a motor for a particular application. [1marks]

4. (a) State two applications of each of the following semi-conductors: [3marks]

(i) Transistor,

(ii) Light emitting diode.

(iii)Diode.

(b) State two methods of determining whether a transistor is a PNP or an NPN. [1marks]

5. (a) Draw the following bias condition of the following transistors: [3marks]

(i) PNP common base.

(ii) NPN common collector.

(iii) NPN common base.

(b) Explain the half-split method of locating a fault in a multistage amplifier circuit. [2marks]

6. (a) Explain the following terms with respect to a simple leclanche cell and explain one method to minimize each of the problem; [2marks]

(i) Polarization,

(ii) Local action.

(b) State two junction – bias conditions necessary for a transistor to conduct in a live circuit. [1mark]

(a) Draw and list **four** equipment at the consumers intake point [4marks]

7. (a) State the recommended cable size for each of the following final sub-circuits in a domestic installation. [2marks]

(i) Cooker circuit,

(ii) Fuse fitted in a plug of an iron box,

(iii) A light circuit,

(iv) 13A ring power circuit.

(b) What is the purpose of an earth wire in a circuit? [1mark]

8. (a) Give the reason why a 240V motor whose armature resistance is 0.5Ω draws 15A and not 480A when running at rated speed. [1mark]

(b) Calculate the efficiency of a transformer which delivers 7.5KW of power to a load. The copper loses and iron loses are 150W and 100W respectively. [1mark]

(c) Figure 1 shows a network of inductors. Calculate; [3marks]

(i) The total inductance with no mutual inductance.

(ii) The energy in inductor L_1 and L_2 if currents through them is 8A and 4A respectively.

(iii) The total inductance between inductor L_1 and L_3 with mutual inductance of 3mH when they are connected in series aiding.

Figure 1

9 (a) With the aid of circuit diagrams show how **three** lamps are connected to a common source to achieve each of the following lighting conditions: [2marks]

(i) Bright light.

(ii) Dim light.

(b) The range of a moving-iron instrument of resistance 12Ω is extended by using a resistor of 0.0065Ω. If the full scale deflection current is 25mA, determine the maximum current the modified instrument can measure. [2marks]

(c) Figure 2 shows a transistor circuit used for switching a 80mA bulb. If the gain of the transistor is 120: [2marks]

(i) Calculate the base current I_B.

(ii) Calculate the emitter current, I_E.

(iii) Determine the I_{BE}.

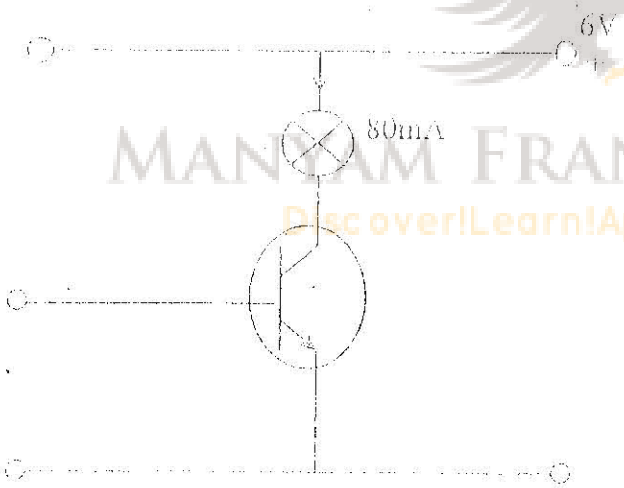

Figure 2

10. (a) Draw a circuit diagram to illustrate how a lamp at the centre of a workshop is controlled from three independent positions. [3marks]

(b) Outline the procedure of carrying out a polarity test on a new domestic installation. [3marks]

(c) Figure 3 shows an RLC circuit. Calculate the total circuit impedance [3marks]

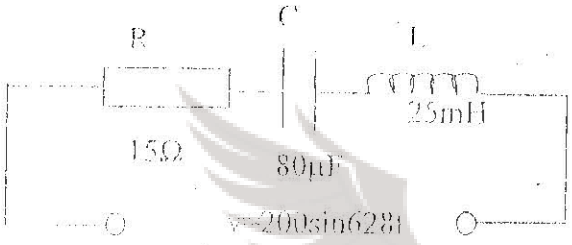

Figure 3

SECTION B (52 MARKS)

Answer any **FOUR** questions from this section.

11 (a) For the circuit shown in figure 4, calculate; [4marks]

(i) Collector current,

(ii) Emitter current,

(iii) Emitter voltage,

(iv) Collector – emitter voltage.

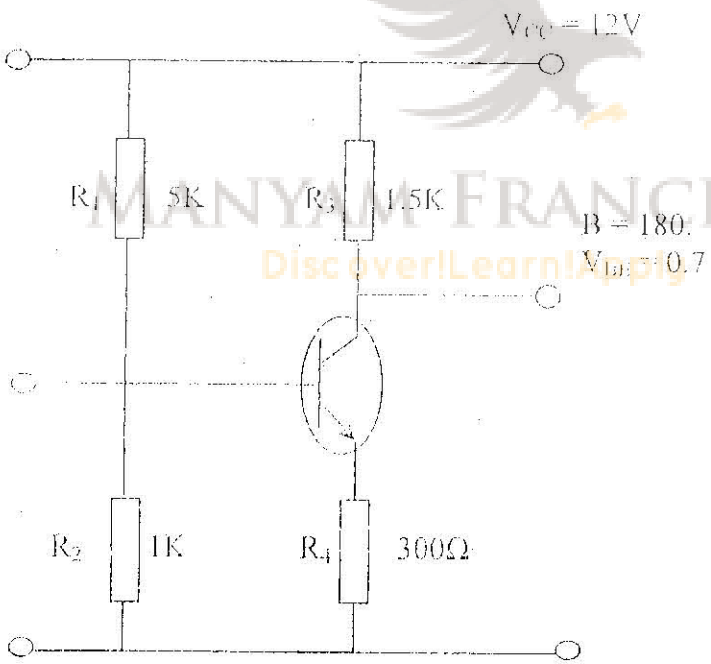

Figure 4

(b) Draw a schematic diagram showing how **THREE** domestic units are connected to a three phase 4-wire distribution system. Indicate the value of ; [4marks]

(i) A line voltage,

(ii) A phase voltage.

(c) With the aid of a labeled diagram, explain the construction and operation of a capacitor start induction run motor. [5marks]

12.(a) Figure 5 shows a drawing of a machine component. On the drawing paper draw in third angle projection the following views; [7marks]

(i) The front elevation in the direction of arrow Z,

(ii) Plan,

(iii) End elevation, include **four** major dimensions.

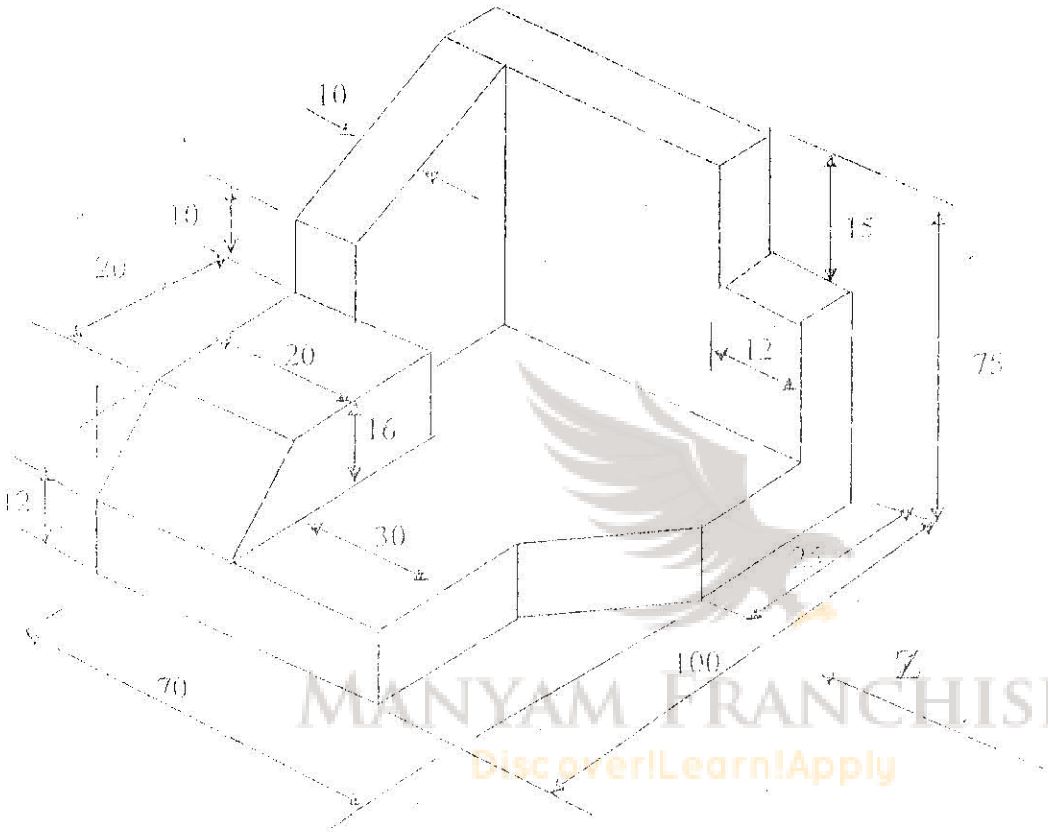

Figure 5

(b) A basic moving coil meter has a resistance of 100Ω and a full scale deflection current of 0.9mA, calculate; [2marks]

(i) The value of resistor required to convert it to a 50V voltmeter.

(ii) The sensitivity of the meter.

(e) Sketch and label **eight** parts of a distribution board. [4marks]

13 (a) A radio receiver circuit is shown in figure 6 below. Name the parts labelled A to H and state the function of each. [8marks]

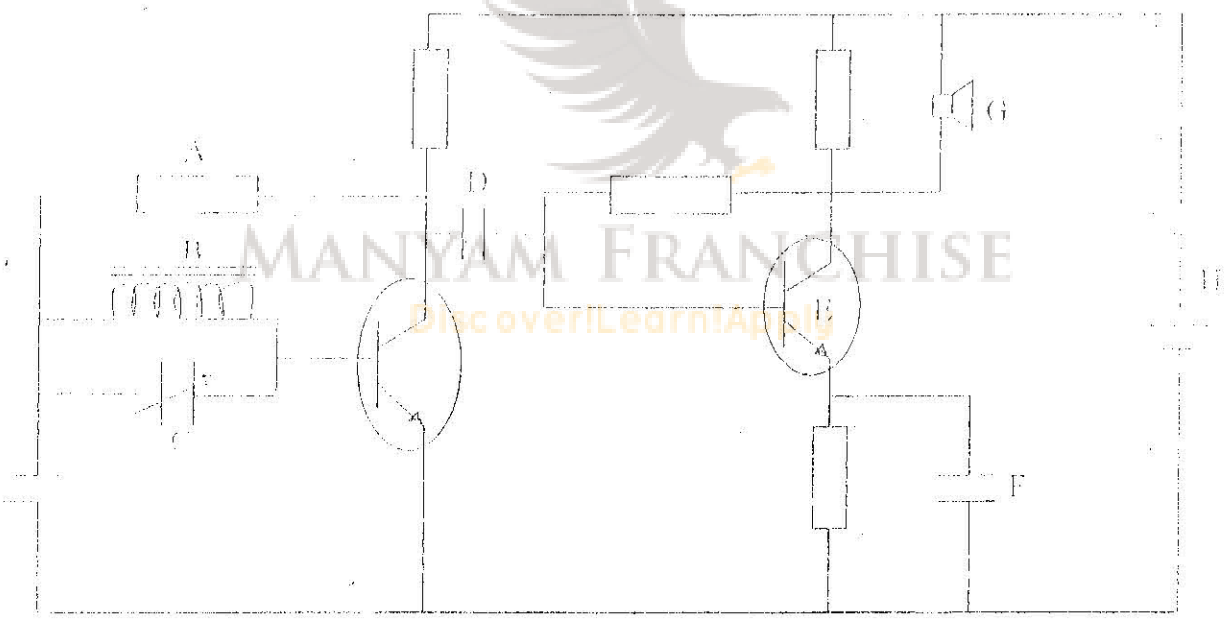

Figure 6

A.....

.....

B.....

.....

C.....

D.....

.....

E.....

.....

F.....

.....

G.....

.....

H.....

.....

(b) Describe **four** elements of a business plan. [4marks]

(c) The armature resistance of a shunt motor of 12V dc is 0.5Ω. At rated speed, its brush voltage drop is 1V and armature current is 1.8A. Calculate its back emf. [1mark]

14 (a) State ; [2marks]

(i) The maximum power transfer theorem.

(ii) **Two** areas in which the theorem is applicable.

(b) Figure 7 shows a series parallel circuit. Calculate the: [3marks]

(i) Value of R_1 for maximum power transfer.

(ii) Maximum power transferred to the load.

(iii) Current through the load at maximum power.

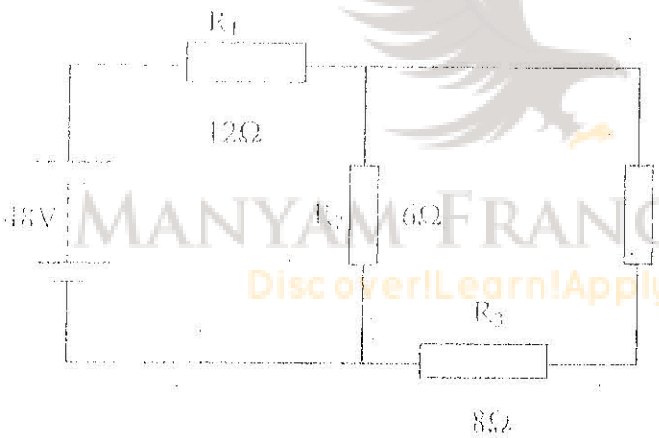

Figure 7

(c) Describe the procedure for installing a lighting final sub-circuit using plastic conduit system on a wooden surface. [4marks]

(d) I- What does the specification 7/0.85 of a cable mean? Calculate the cross section area of the cable [1mark]

(b) The graph in figure 8 shows the current – voltage characteristic of a zener diode. [3marks]

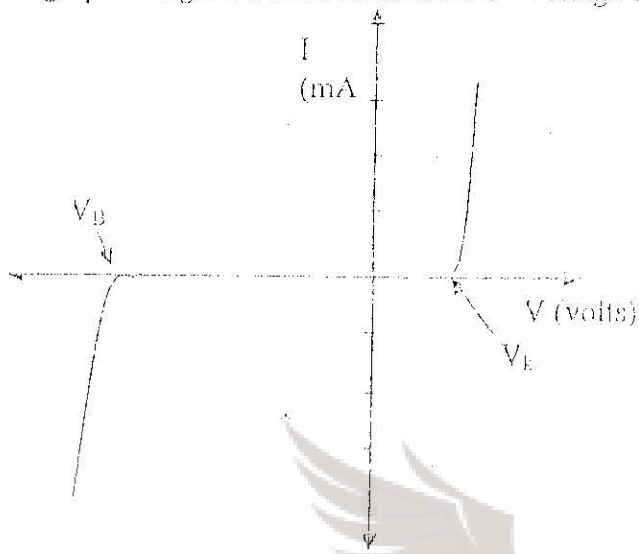

Figure 8

Draw schematic diagrams of the experiment set – up used to determine the curves.

15 (a) An electrical network is arranged as shown in figure 9 Calculate ; [5marks]

(i) The total circuit current,

(ii) Power dissipated in resistors R_4 and R_6.

(iii) Energy consumed by resistors R_2 and R_5 if the resister work for 25 minutes

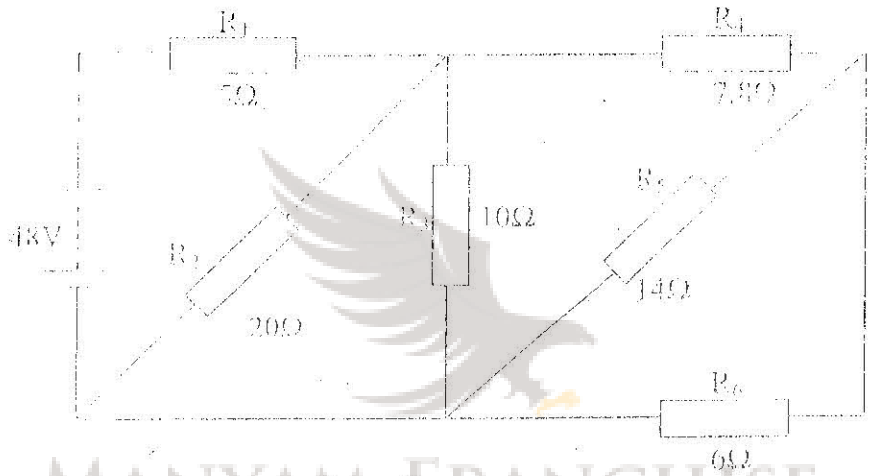

Figure 9

(b) With the aid of a labeled diagram explain the construction and the operation of a starter in a fluorescent lamp. [Marks]