NAME:.....CLASS:.....ADMNO:.....
448/1
ELECTRICITY
PAPER 2
Practical
MAY 2016
2½ hours

ALLIANCE HIGH SCHOOL
ELECTRICITY
PAPER 2
Practials
TIME:2½hrs

Date of CAT:.....
Date of returning scripts:.....
Date of revising scripts:.....

100 %

INTRUCTIONS :

There are **FIVE** stations in this paper, attempt **ALL** the exercises.
Each exercise will be awarded a maximum of 20 marks.
At each station, candidates are not allowed to either review the previous station's work or read instructions for the other stations.
All dimensions are in millimeters unless otherwise stated.
Candidates require the following;

- Drawing instruments,
- Calculator / mathematical table.
  Drawing paper size A4

Do not write on this table

EXERCISES	1	2	3	4	5	TOTAL
MARKS						

This paper consists of –8-- printed pages.

Candidates should check the question paper to ensure that all the pages are printed as indicated and no questions are missing.

EXERCISE 1

(a) Using the materials and equipment provided, connect the circuit with S_1 open as shown in figure 3. [2marks]

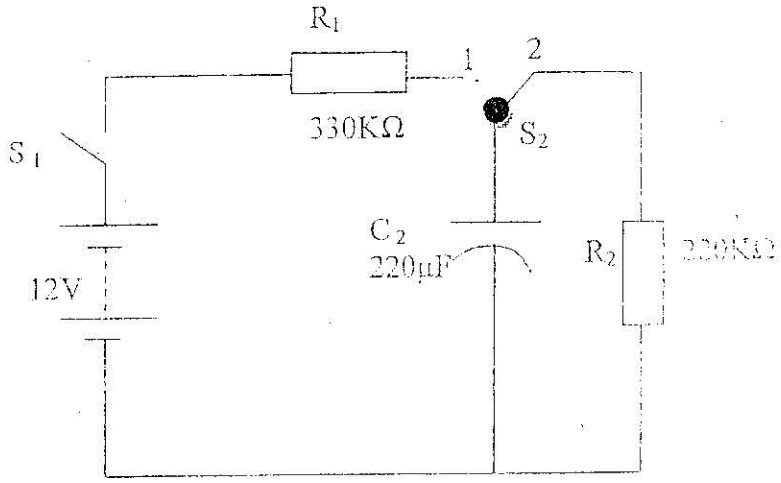

Figure 3

(b) With S_1 still open, switch S_2 to position 1.

(c) Close S_1, measure and record the voltage across capacitor C at time intervals given in table 3.

Time(s)	0	10	20	30	40	50	60	70
Voltage (V)								

Table 3 [4marks]

(d) Open S_1, leave S_2 at position 1 and quickly measure and record the voltage across the capacitor. .....V. [1mark]

(e) Switch S_2 to position 2, measure and record the voltage across capacitor C at time intervals given in table 4.

Time (S)	0	10	20	30	40	50	60	70
Voltage (V)								

Table 4 [4marks]

(f) On the same axis, plot the curves for voltage against time for the values obtained in;

(i) Table 3,
(ii) Table 4. [7marks]

(g) State the effect of making R_1 much greater than 220KΩ. [1mark]

.....

.....

.....

.....

.....

.....

(h) State **two** applications of the circuit. [1mark]

.....

.....

.....

.....

.....

.....

.....

EXERCISE 2

Using the equipment and materials provided, perform the following tasks.

(a) Measure and record the resistance of the 220Ω resistor using the ohmmeter. [1mark]

(b) Set the potentiometer to the same value of the resistance measured in (a). [1mark]

(c) Set power supply to 12V.

(d) Without disturbing the potentiometer and the power supply settings, connect the circuit as shown in figure 1. [4mark]

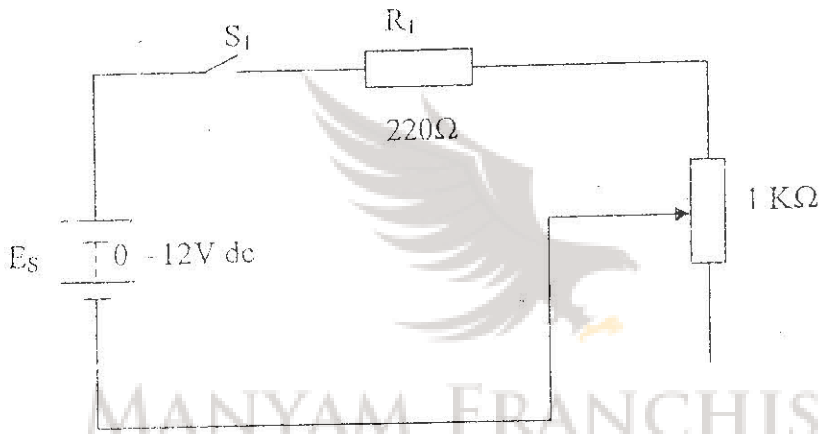

Figure 1

(e) Measure and record the volt drop across; (i) 220Ω resistor,

.....

(ii) potentiometer,

.....[2marks]

(f) Add the voltages measured in step (e),.....

.....

Comment on the sum in relation to the value in step (c) [2marks]

.....

.....

(g) Replace the potentiometer with 470KΩ resistor and the 220Ω resistor with 100KΩ

resistor. [2marks]

(h) Repeat steps (e) and (f), for the new resistor values. [6marks]

(i) 470Ω.....

(ii) 100KΩ.....

(iii) sum.....

Comments.....

.....

(i) State the significance of this experiment. [2marks]

.....

.....

.....

EXERCISE 3

Using the components, materials and equipment provided, connect t the circuit as shown in figure 4. [4marks]

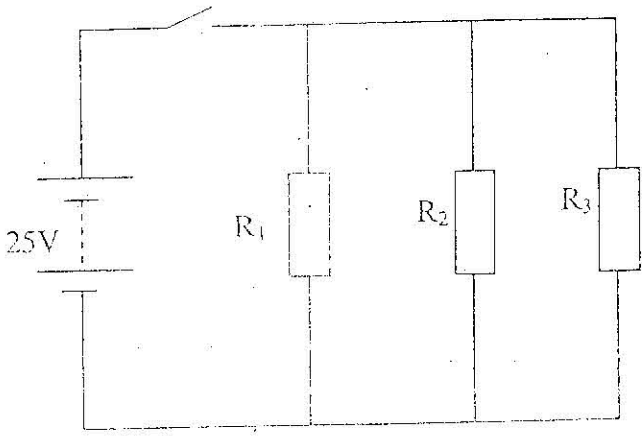

Figure 4

(a) Measure and record the total circuit current I_T. [1½mark]

I_T = ...

(b) Measure and record the current through each of the following resistors.

R_1 (mA) = ...,

R_2 (mA) = ...,

R_3 (mA) = ...,[4½marks]

(c) In the circuit;

(i) Replace R_3 with R_4. [2marks]

(ii) Repeat step (a) above; [1½marks]

I_T = ...

(iii) Repeat step (b) above and record the following

R_1 (mA) = ...,

R_2 (mA) = ...

R_3 (mA) = ..., [4½marks]

(d) (i) state the effect on the current when R_3 is replaced with R_4. [1mark]

(ii) State the relationship between total circuit current (I_T) and the branch current. [1mark]

EXERCISE 4

Using the tools, materials and equipment provided, fabricate the cell holder shown in figure 4. [20marks]

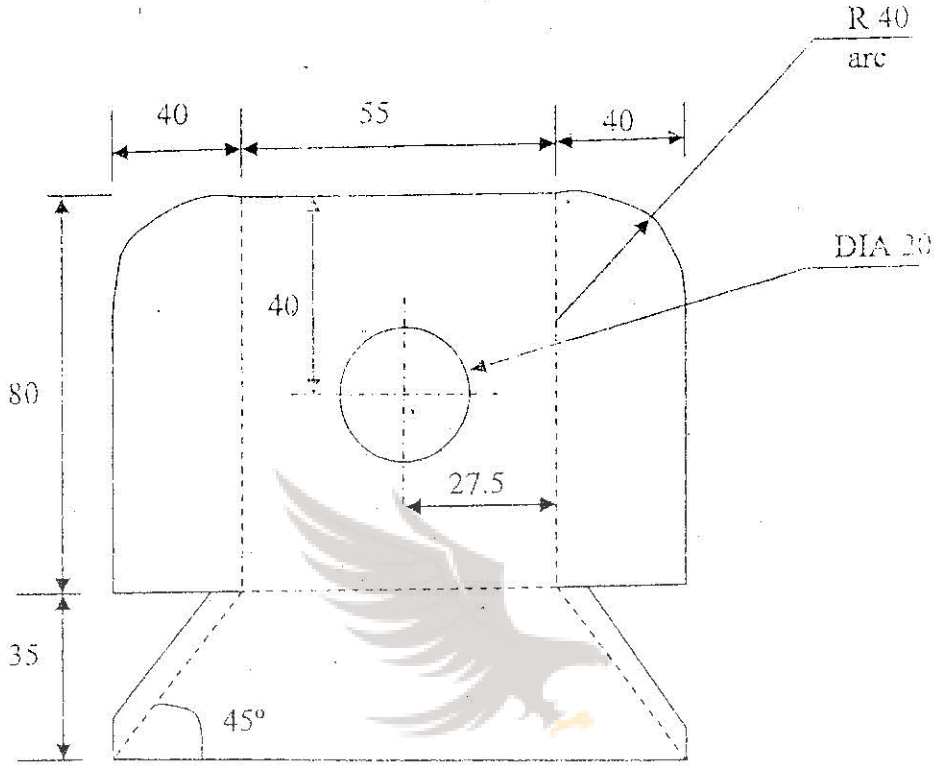

Figure 4

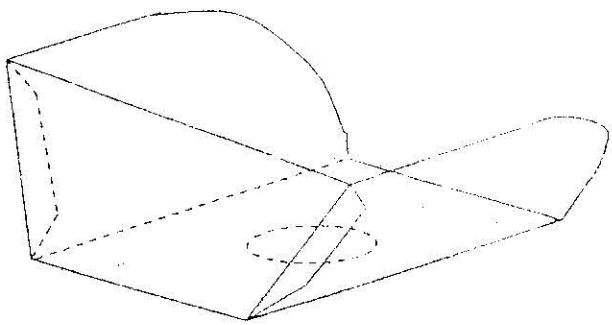

EXERCISE 5

Figure 5 shows the layout of a lighting circuit. Using PVC conduit wiring system, tools and equipment install the circuit.

Draw the wiring diagram

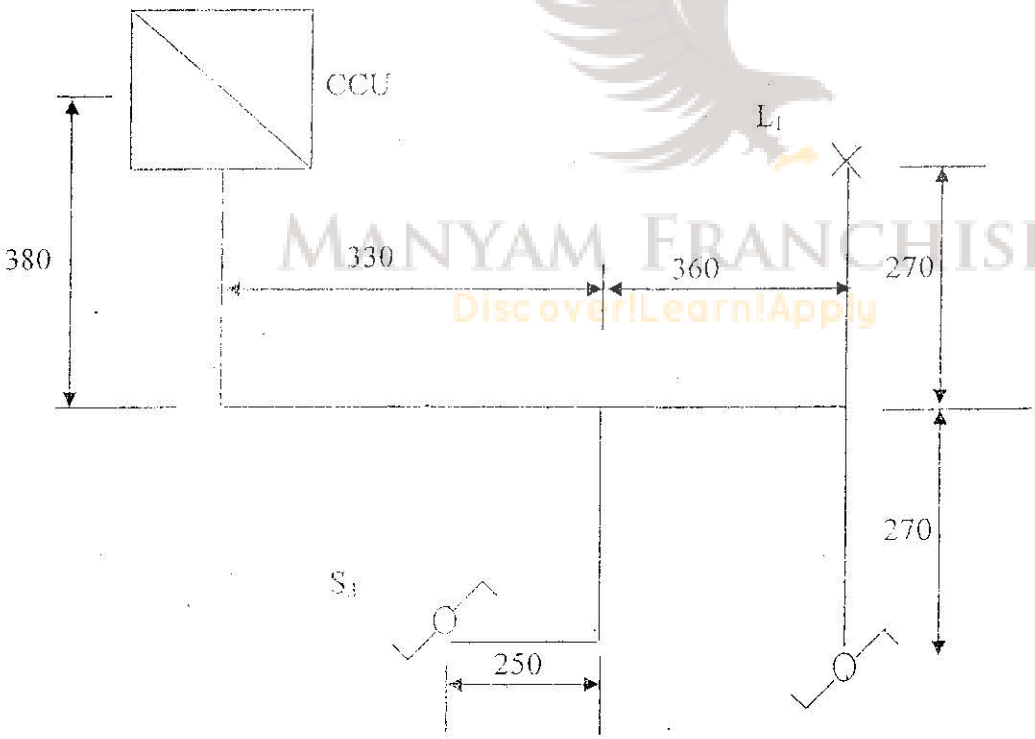

Figure 5