NAME…….. **INDEX No** ……..

ADM…….. Student's signature…… Date…….

232/2
PHYSICS REVISION KIT 2018
Paper 2
(THEORY)
2 Hours

INSTRUCTIONS TO CANDIDATES

1. Write your **NAME, INDEX NUMBER** and **ADM NUMBER** in the spaces provided above.
2. Sign and write the date of examination in the spaces provided above.
3. This paper consists of three sections: **A** and B
4. Answer ***ALL*** questions in sections **A** and **B**.
5. Answers to all questions must be in the spaces provided.
6. Candidates should check the question paper to ascertain that all the pages are printed as indicated and that no questions are missing

For examiner's use only

SECTION	Question	Maximum score	Candidate's score
A	1-13	25	
B	14	13	
	15	9	
	16	9	
	17	12	
	18	12	
TOTAL SCORE		80	

This paper consists of twelve (12) printed pages

SECTION A (25 marks)

Answer all questions in this section in the spaces provided.

1. Explain why when the pinhole of a pinhole camera is enlarged, a brighter but very blurred image is seen on the screen (2mks)

……

……

……

……

……2

2.What is local action in a dry cell and how is it minimized? (2marks)

……

……

……

……

3. Name any two functions of a gold leaf electroscope. (2 mks)

……

……

……

4. Indicate the polarities at A and B (1mk)

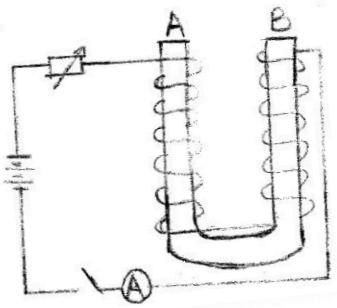

4. The graph below shows the displacement of a pendulum bob from its rest position as it varies with time.

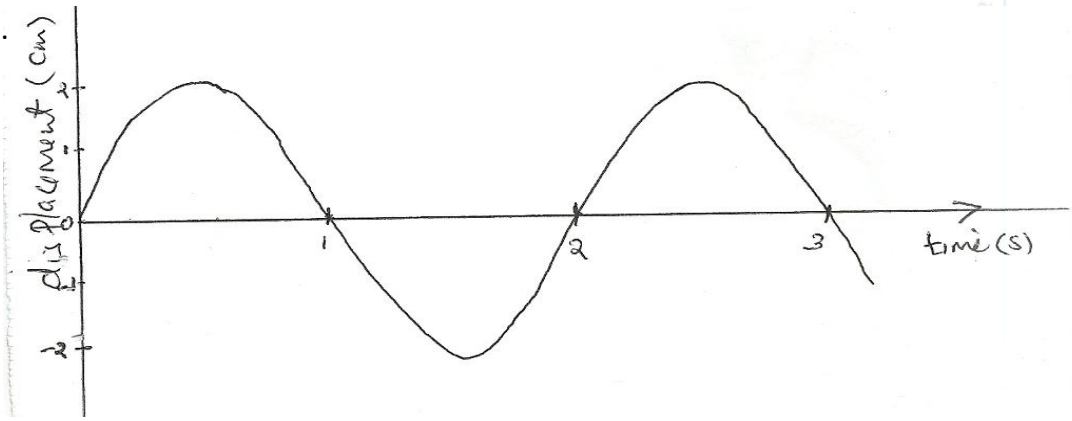

(a) What is the frequency of the pendulum? (2 mks)

……

……

……

(b)Draw on the same graph the graph representing a pendulum swinging with half the amplitude and twice the frequency. (1mk)

6. State the Flemings right –hand rule for a straight conductor carrying current (1mk)

……

……

……

……

7 . State any factor that affect the strength of an electromagnet (1mk)

……

……

8. A soldier standing some distance from a wall, blows a whistle and hears its echo 1.8 seconds later. How far is the wall from the soldier? (speed of sound in air = 330m/s). (3marks).

……

……

……

……

9. Give a reason why transmission of electric power is done at very high voltage. (1mark)

……

……

……

……

10. Name the colour of the rays marked X and Y in the diagram below (2mks)

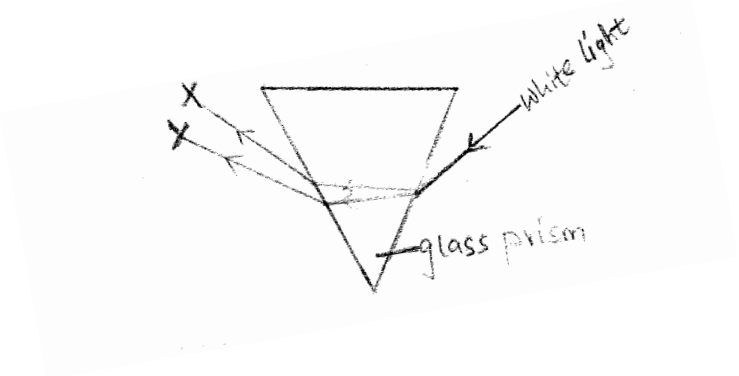

11. Calculate the angle of refraction for a ray of light from air striking an air- glass interface making an angle of 30^0 with the interface ($a\Omega_g$ =1.5) (3mks)

.....

.....

.....

.....

12 .The initial mass of a radioactive substance is 20g. The substance has a half life of 2 years. Determine the mass remaining after 20 years. (3 mks)

.....

.....

.....

.....

.....

.....

13. State what is meant by extrinsic semiconductor (1mk)

.....

.....

SECTIONB (55 marks)

Answer all question from this section

14. a) State Lenz's law of electromagnetic induction. (1mark)

……

……

……

b) The figure below shows a simple electric generator.

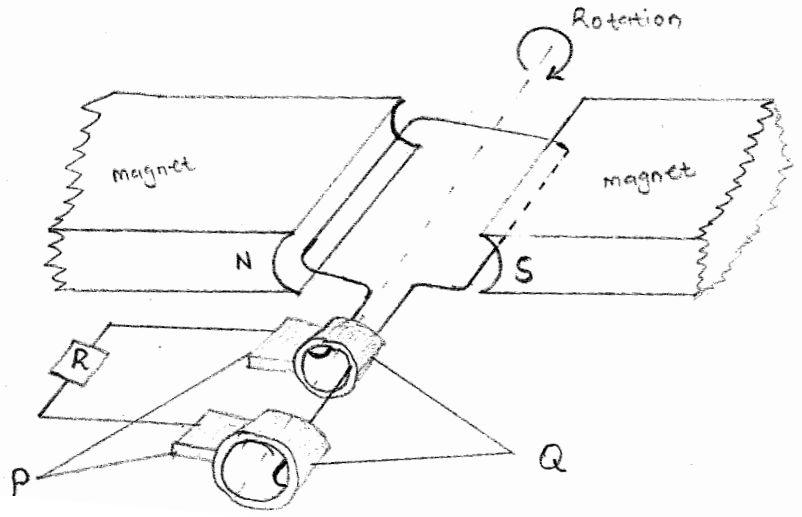

i) Name the parts labeled P and Q. (2marks)

P……

Q……

(ii) The e.m.f. generated as the coil rotates is represented in the graph below.

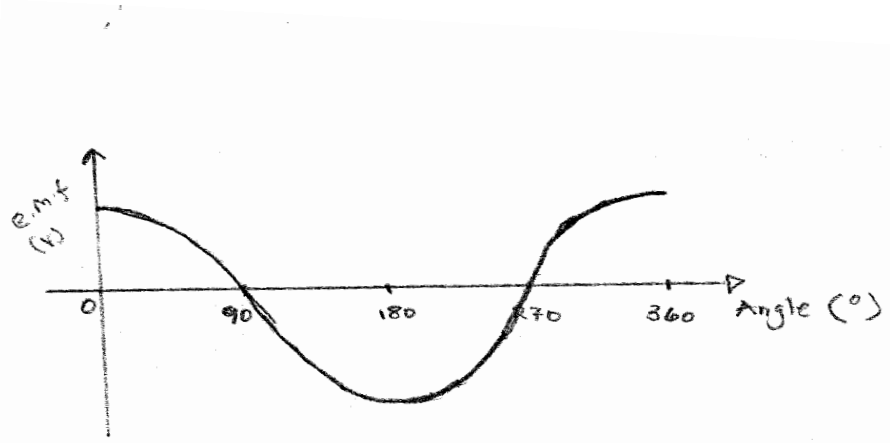

iii) Give reasons for the changes in the emf as the coil rotates from 0° to 90• and 90• to 180° .
(3marks)

……

……

……

……

……

……

……

(c) Explain how energy losses in a transformer are reduced by having:

i) a soft-iron core; (1mk)

……

……

(ii) a laminated core (1mks)

……

……

……

d) A transformer with 1200 turns in the primary circuit and 120 turns in the secondary circuit has its primary circuit connected to a 400 V a.c. source. It is found that when a heater is connected the secondary circuit, it produces heat at the rate of 600 W, assuming its 100% efficient, determine the:

i) Voltage in the secondary circuit; (2 marks)

……

……

……

……

ii) current in the primary circuit; (2marks)

……

……

…. ……

iii) the current in the secondary circuit; (1mark)

……

……

……

15.(a) X-rays are used for detecting cracks inside metal beams.

(i) State the type of x-rays used (1mk)

……

……

(ii) Give a reason for your answer in (i)above (1mk)

……

……

b) Figure shows the features of an X-ray tube.

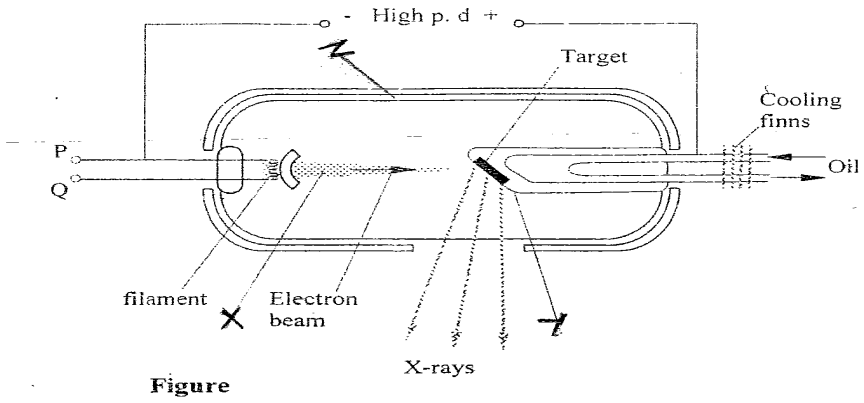

Figure

(i) Name the parts labeled X, Y and Z (3mks)

X…….

Y…….

Z……

(ii) Explain how a change in the potential across PQ changes the intensity of the X-rays produced in the tube (2mks)

……

……

……

……

……

(iii) During the operation of the tube, the target becomes very hot .explain how this heat is caused.(1mk)

……

……

……

(iv) What property of lead makes it suitable for use as shielding material (1mk)

……

……

……

16. a) The figure below shows one of the common eye defects.

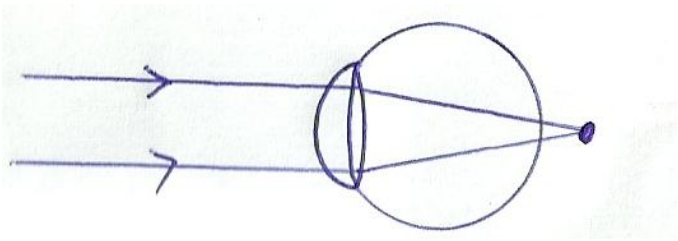

(i) State the type of defect and its possible cause. (1 mk)

……

……

……

……

(ii) Show on the diagram how the defect can be corrected. (2 mks)

(b) An object of 5cm stands before a diverging lens of focal length 15 cm and at a distance of 10 cm from the lens. Determine

(i) i) The image distance. (3 mks)

……

……

……

……

……

……

(ii) The magnification due to the lens. (2 mks)

……

……

……

(c) The diagram below shows a curved mirror.

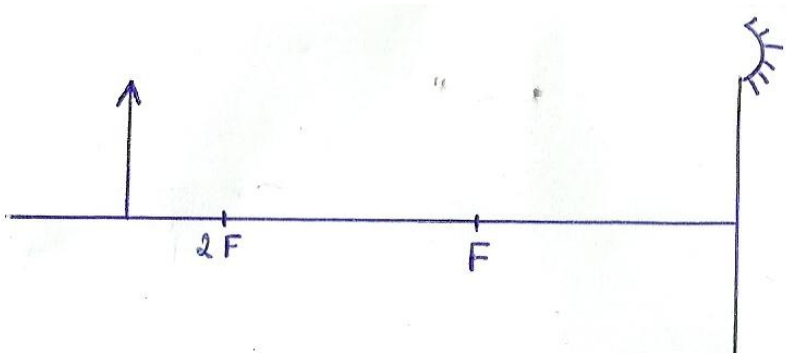

i) What type of mirror is it? (1mk)

……

ii) By use of rays, locate the image of the object shown on the diagram. (2 mks)

17 a) the figure below shows an electrical circuit with three capacitors A ,B and C of capacitance 4.0 ùF, 5.0 ùF and 3.0 ùF respectively connected to a 12 V battery.

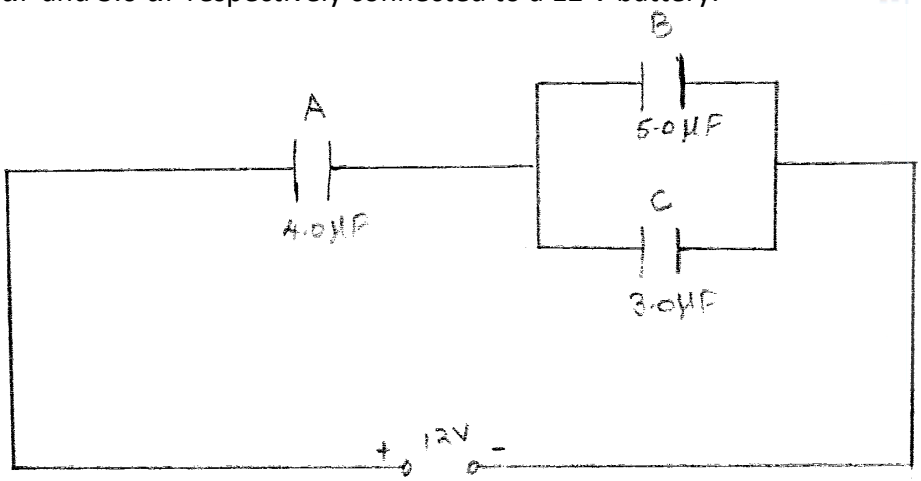

Determine:

(i) the effective capacitance of the circuit; (3marks)

……

……

……

……

(ii) The charge on the capacitor A; (2marks)

……

……

……

……

(iii) The potential difference across the capacitor B. (2marks)

……

……

……

……

a) The figure below shows a cell in series with a 3 Ω resistor and a switch. A high resistance voltmeter is connected across the cell.

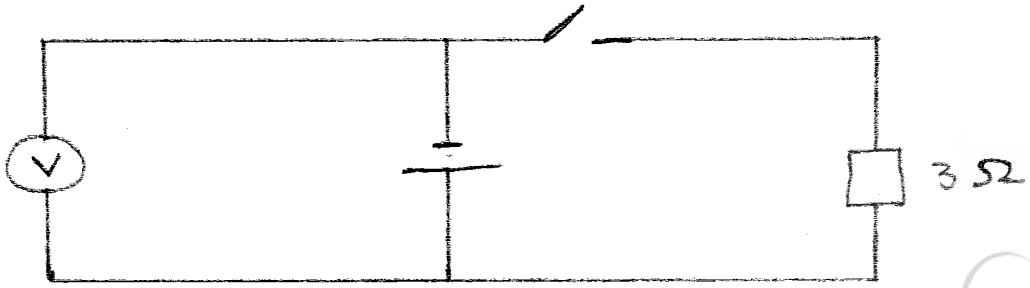

The voltmeter reads 1.5 V with the switch open and 1.2 V with the switch closed.

(i) State the electromotive force of the cell. (1mk)

……

……

(ii) Determine the current through the 3ñ resistor when the switch is closed. (2marks)

……

……

……

……

iii) Determine the internal resistance of the cell. (2marks)

……

……

……

……

18. a) state the effect on the electrons emitted by the photoelectric effect when;

i)The frequency of the incident radiation is increased; (1mark)

……

……

……

ii) The intensity of incident radiation is increased. (1mark)

……

……

……

b) the maximum wavelength of light required to cause photoelectric emission on a metal surface is 8.0 x 10^{-7} m. the metal surface is irradiated with light of frequency 8.5 x 10^{14} Hz.

Determine;

i)The threshold frequency; (2marks)

……

……

……

……

(ii)The work function of the metal in electron volts ; (2mks)

……

……

……

……

(iii) The maximum kinetic energy of the electrons; (2mks)

……

……

……

(iv) The maximum velocity of the emitted electrons. (2mks)

Take 1ev=1.6 x 10^{-19} J

C= 3.0 x 10^{8} m/s`

h=6.63 x 10^{-34} Js

m_e = 9.11 x 10^{-31} Kg.

.....

.....

.....

.....

.....

.....

.....

.....

.....

.....

.....

MARKING SCHEME

PAPER 2

SECTION A

1 . The additional brightness of the resultant image is due to the light which gets into the camera through the enlarged hole (1mk)

-The image is blurred due to overlapping of different images falling on the same spot (1mk)

2.- this is when the zinc plate get 'eaten' away when the cell is working

- it is minimized by use of pure zinc or coating it with mercury(amalgamation).

3. i) detecting presence of charge

ii) identifying type of charge

iii) detecting the amount of charge

iv) distinguishing insulators from conductors

4. A-North pole (1mk)

B-South pole (1mk)

5. a) T= 2s

f = 1/T = ½ = 0.5Hz

b)

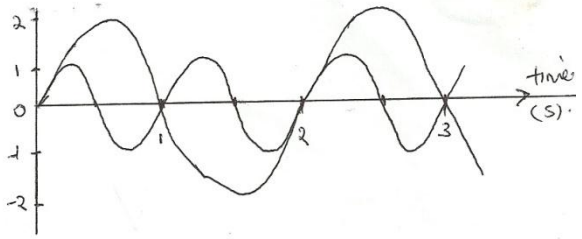

6. If the conductor carrying current is grasped in the right hand thumb pointing a long the wire in direction of conventional current the fingers will point in the direction of the magnet (1mk)

7. (a) size of the current in the solenoid

(b) number of turns of wire

(c) the shape of the core

(d) The length of the solenoid

(any correct 1mk)

8. speed =2d/t

d= speed ×time/2

= 330 ×1.8/2

d= 297m

9. to reduce power loss in the transmission cables through heat.

10. X- violet light (1mk)

Y-Red light (1mk)

11. <i = 90-30 = 60^0

$\frac{\sin i}{\sin r} = \frac{\sin 60}{\sin r} = 1.5$ ✓1

$\sin r = \sin 60/1.5 = \frac{0.866}{1.5} = 0.5773$ ✓1

r=$\sin^{-1}(0.5773) = 35.26^0$ ✓1

13. Its an intrinsic semiconductor to which some impurities have been added (doping) to enhance conductivity. (1mk)

SECTION B

14.a) Lenz's law states that the direction of the induced emf is such that the induced current which it causes to flow produces a magnetic effect that opposes the change producing it.

b) i) P-carbon brushes

Q-slip rings

ii) 0^0-90^0 magnetic flux cut changes from high to low(decreasing)

90^0-180 magnetic flux change from low to high(increasing)

At each peak 0^0-180^0 magnetic flux change is maximum though in different directions (position of coil)

c) Reduce heat loss due hysteresis, because the domains in soft-iron quickly to change in magnetic field i.e, easily magnetized and demagnetized.

ii) Reduces heat loss due to eddy current. Because laminating cuts off the loops of each current reducing them considerably.

c) i) Ns/Np = Vs/Vp

Vs=Ns/Np × vP

=120/1200×400

=40V

ii) power input = 600w

I_p =600w/400w

=1.5A

iii) I_s= 600w/40v

=15A

15. a) (i) hard x-rays

(ii)They are more penetrating / energetic

(b) (i) X- Cathode rays /electrons

Y-Anode (copper anode)

Z- Lead shielding

(ii) Change in potential difference across PQ changes filament current (increase temperature of the cathode increasing thermionic emission)

This change in number of electrons released by cathode hence intensity of X-rays

(iii) Most of the kinetic energy of electrons hitting target is converted to heat

(iv) High density

16 a) i) the defect is long sightedness (hypermetropia)

ii)

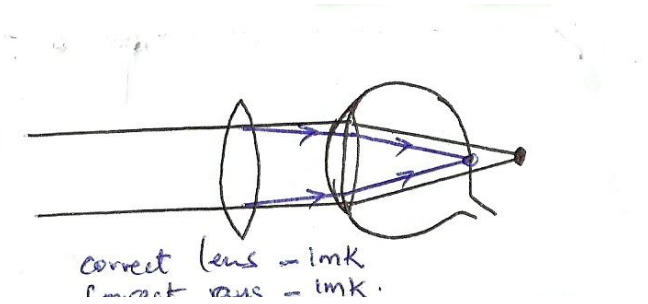

b) i) $\frac{1}{f} = \frac{1}{u} + \frac{1}{v}$

But f=-15

$\frac{1}{-15} = \frac{1}{5} + \frac{1}{v}$

f = -3.75 cm f = 3.75 cm

i) Magnification m = $\frac{v}{u} = \frac{3.75}{10}$

c) i) concave mirror

ii.

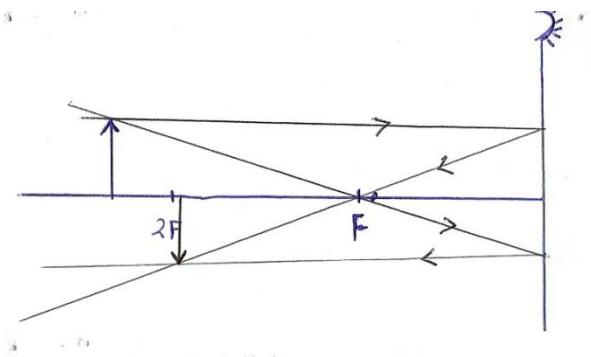

17) i) capacitors in parallel,

$C_T = c_2 + c_3$

=5+3

=8ɥF

Effective capacitance

C_T = product/sum

=4×8/4+8

=32/12

=2.67ҰF / 2.67×10^{-6}F

ii)total charge, $Q_T = C_TV$

=2.67×12

= 32ɥC

Charge in A = total charge

=32Ҵc / 3.2×10^{-5}C

iii) p.d across B = Q/C

= 32/8

= 4V

bi) E.m.f = 1.5V

ii) V = IR

I=V/R

=1.2/3

= 0.4 A

iii) E = Ir +V

Ir = E -V

r=E –V/I

=1.5-1.2/0.4

=0.75Ω

18.a)i) max K.E of the emitted electrons will increase ✓1

ii) number of electrons emitted will increase ✓1

b) i) $C = f\lambda_o$

$f_o = C/\lambda_o$

$\frac{3.0X10^8}{3.0X10^7}$ ✓1 $= 3.75X10^{14}Hz$ ✓1

ii. $Wo = hfo$

$6.63X10^{-34}X\ 3.75X10^{14}$ ✓1

$2.49X10^{-19}$ ✓1

$= 1.56\ eV$

iii. $K.E_{max} = hf - hf_o$

$=h(8.5 X 3.75)X\ 10^{14}$

$=3.15 X 10^{-19}J$ ✓1

$=1.96 X 10^{-19}$ eV ✓1

iv. $1/2M_e v^2 = K.E_{max}$

$v^2 = \frac{2K.Emax}{Me}$

$= \frac{2X3.15X10^{-19}}{9.11X10^{-31}}$ ✓1

$= 8.32 X 10^5 m/s$ ✓1