Powered By:
0728 450 425

4.4 PHYSICS (232)

4.4.1 Physics Paper 1 (232/1)

SECTION A (25 marks)

*Answer **all** the questions in this section in the spaces provided.*

1 **Figure 1** shows part of the main scale and vernier scale of a vernier callipers.

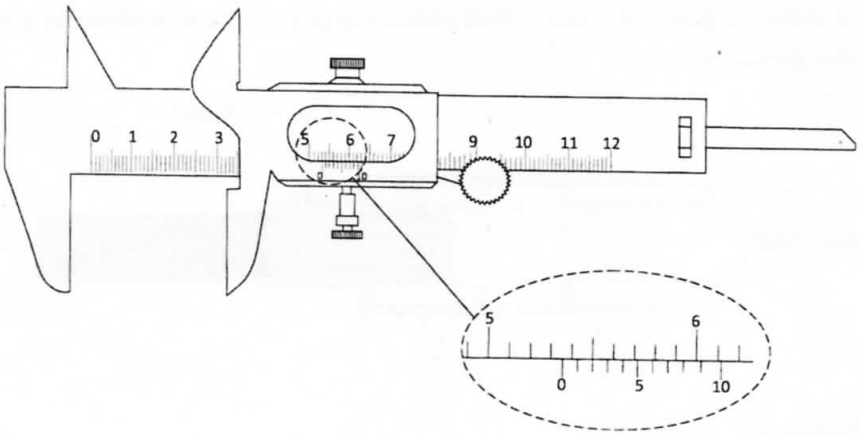

Figure 1

Record the reading indicated. (1 mark)

2 State **one** factor that affects the turning effect of a force on a body. (1 mark)

3 **Figure 2** shows some air trapped by mercury in a glass tube. The tube is inverted in a dish containing mercury.

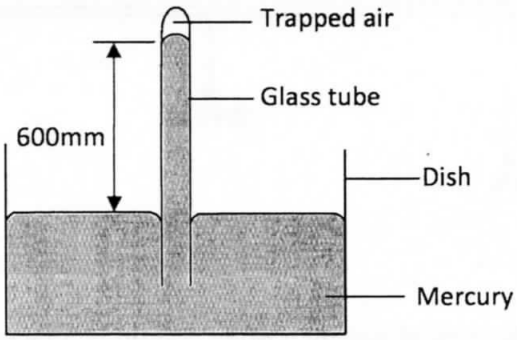

Figure 2

Given that the atmospheric pressure is 760 mmHg and the height of mercury column in the tube is 600 mm, determine the pressure of the air trapped in the tube in mmHg. (3 marks)

4 An object of weight 20 N attached at the end of a spring causes an extension of 0.5 cm on the spring.

(a) Determine the spring constant of the spring. (2 marks)

POWERED BY: WWW.MANYAMFRANCHISE.COM

(b) Determine the weight of an object that would cause an extension of 0.86 cm when attached at the end of the same spring. (1 mark)

5 State **two** measurements you would take in an experiment to determine the upthrust of an object which is immersed in a fluid. (2 marks)

6 State how the measurements in question (5) are used to determine the upthrust of the object. (1 mark)

7 **Figure 3** shows a piece of wood fitted into a copper pipe and a piece of paper wrapped tightly around the junction.

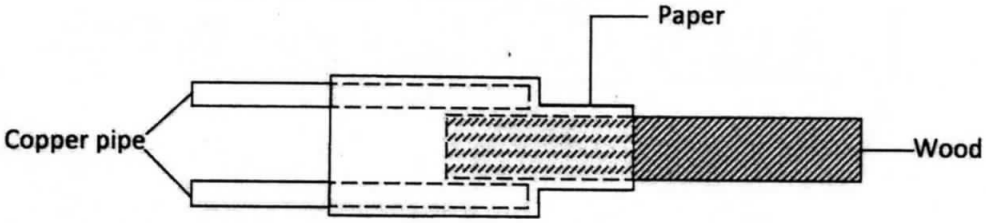

Figure 3

It is observed that when a flame is applied around the paper at the junction, the side of the paper around the wood burns first. Explain this observation. (2 marks)

8 **Figure 4** shows a uniform metre rule of weight I N with two weights of 0.18 N and 0.12 N suspended from its ends.

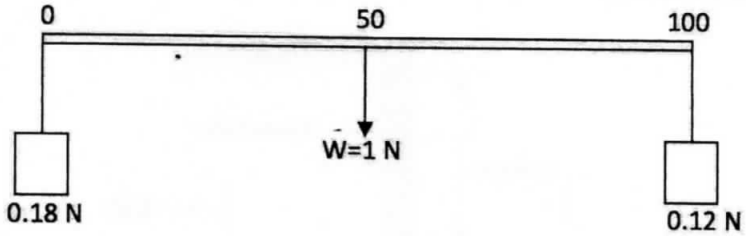

Figure 4

Determine how far from the 0.18 N weight a pivot should be placed in order to balance the meter rule. (3 marks)

9 Explain why brakes fail in a hydraulic braking system when air gets into the system. (2 marks)

POWERED BY: WWW.MANYAMFRANCHISE.COM

Powered By:
0728 450 425

10 **Figure 5** shows a Bunsen burner.

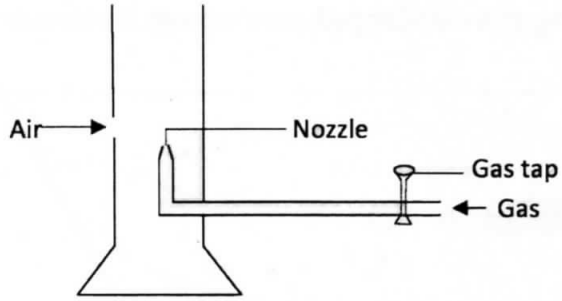

Figure 5

Explain how air is drawn into the burner when the gas tap is open. (3 marks)

11 **Figure 6 (a)** and **6(b)** show capillary tubes inserted in water and mercury respectively.

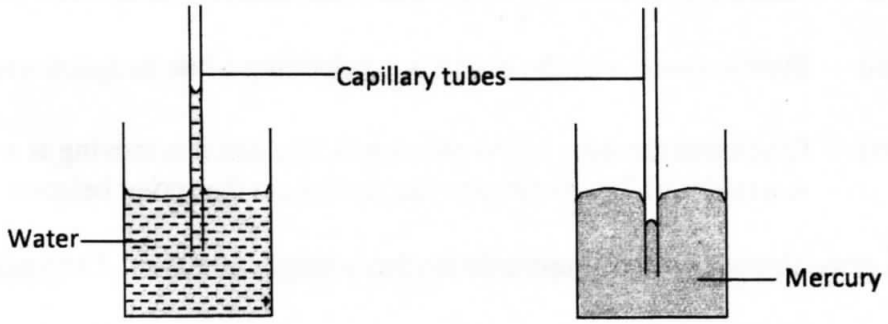

Figure 6(a) **Figure 6(b)**

It is observed that in water the meniscus in the capillary tube is higher than the meniscus in the beaker, while in mercury the meniscus in the capillary tube is lower than the meniscus in the beaker. Explain these observations. (2 marks)

12 State why it is necessary to leave an air space in a closed glass bottle of water when it is to be kept in a refrigerator. (1 mark)

13 A drop of blue ink is introduced at the bottom of a beaker containing water. It is observed that after some time, all the water in the beaker turns blue. Name the process that takes place. (1 mark)

SECTION B (55 marks)

*Answer **all** the questions in this section in the spaces provided.*

14 (a) State **two** ways in which the centripetal force on a body of mass m can be increased (2 marks)

POWERED BY: WWW.MANYAMFRANCHISE.COM

(b) **Figure 7** shows an object at the end of a light spring balance connected to a peg using a string. The object is moving in a circular path on a smooth horizontal table with a constant speed.

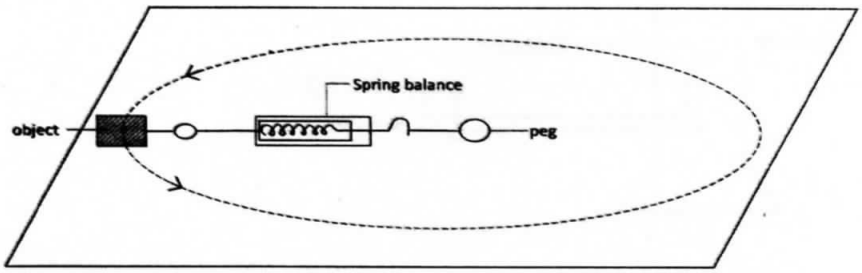

Figure 7

(i) State what provides the centripetal force. (1 mark)

(ii) Indicate with an arrow on the figure the direction of the centripetal force. (1 mark)

(iii) State a reason why the object is accelerating while its speed remains constant. (1 mark)

(iv) Given that the mass of the object is 0.5 kg and it is moving at a speed of 8 ms^{-1} at a radius of 2 m, determine the reading on the spring balance. (3 marks)

(c) A stone thrown vertically upwards reaches a height of 100 m. Determine the:

(i) initial velocity of the stone. (2 marks)
(Neglect air resistance and take $g = 10\ ms^{-2}$)

(ii) total time the stone is in air. (2 marks)

15 (a) State the meaning of the term "*specific latent heat of fusion*". (1 mark)

(b) **Figure 8** shows a set up of apparatus used in an experiment to determine the specific latent heat of fusion of ice.

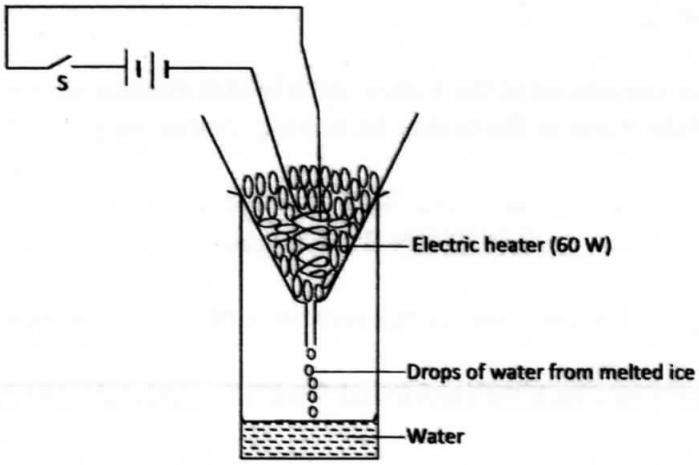

Figure 8

POWERED BY: WWW.MANYAMFRANCHISE.COM

The following readings were noted after the heater was switched on for 5 minutes:

- mass of beaker = 130 g
- mass of beaker + melted ice = 190 g

(i) Determine the:

(I) energy supplied by the 60 W heater in the 5 minutes. (3 marks)

(II) specific latent heat of fusion of ice. (4 marks)

(ii) It was observed that some of the crushed ice melted even before the heater was switched on. State a reason for this observation. (1 mark)

16 (a) A horizontal force of 12 N is applied on a wooden block of mass 2 kg placed on a horizontal surface. It causes the block to accelerate at 5 ms^{-2}. Determine the frictional force between the block and the surface. (3 marks)

(b) **Figure 9** shows a graph of velocity against time for a ball bearing released at the surface of viscous liquid.

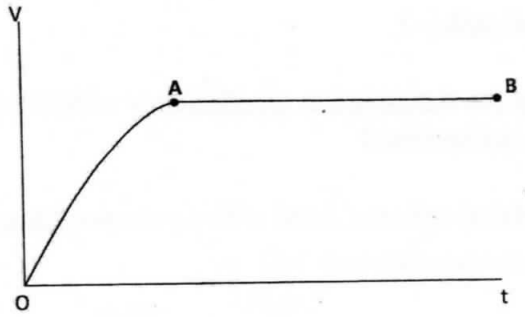

Figure 9

Explain the motion of the ball bearing for parts

(i) OA (2 marks)

(ii) AB (2 marks)

POWERED BY: WWW.MANYAMFRANCHISE.COM

(c) **Figure 10** shows a pulley system used to raise a load by applying an effort of 500 N.

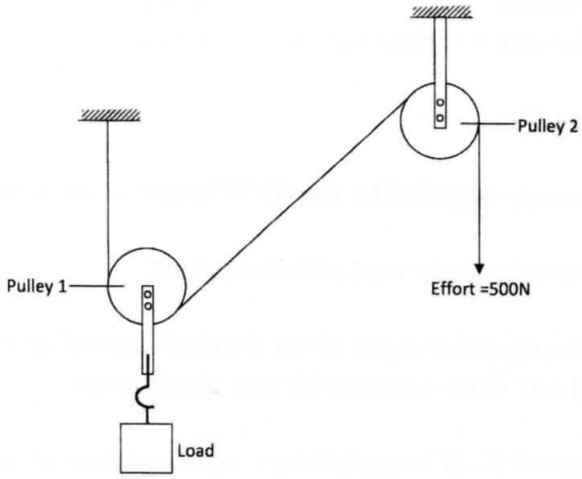

Figure 10

State the:

(i) velocity ratio of the system. (1 mark)

(ii) purpose of pulley 2. (1 mark)

(iii) Given that the machine has an efficiency of 80%, determine the maximum load that can be raised. (3 marks)

17 **Figure 11** shows an insulated cylinder fitted with a pressure gauge, a heating coil and a frictionless piston of cross-sectional area 100 cm^2.

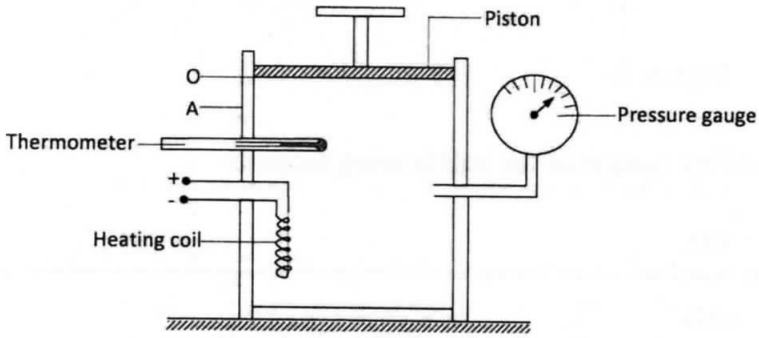

Figure 11

(a) While the piston is at position O, the pressure of the enclosed gas is 10 Ncm^{-2} at a temperature of 27°C. When a 10 kg mass is placed on the piston, it comes to rest at position A without change in the temperature of the gas.

(i) Determine the new reading on the pressure gauge. (4 marks)

(ii) State with a reason how the value obtained in (i) compares with the initial pressure. (2 marks)

POWERED BY: WWW.MANYAMFRANCHISE.COM

(b) The gas is now heated by the heating coil so that the piston moves back to the original position O.

(i) State the reading on the pressure gauge. (1 mark)

(ii) Determine the temperature of the gas in °C. (4 marks)
(*Take* $g = 10\ Nkg^{-1}$).

18 (a) **Figure 12** shows a weighing balance on which a beaker containing some water is placed. The reading on the balance is 2.80 N. A metal block weighing 2.7 N is suspended from a spring balance.

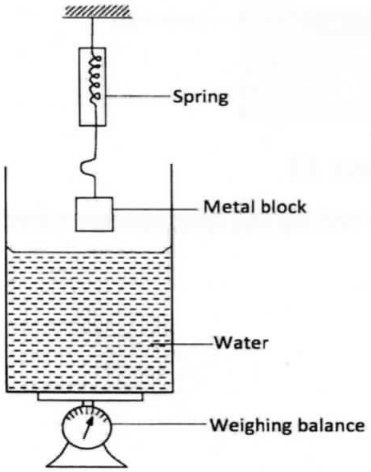

Figure 12

(i) State what is observed on the spring balance and the weighing balance, as the metal block is gradually lowered into the water.

(I) Observation on spring balance. (1 mark)

(II) Observation on weighing balance. (1 mark)

(ii) Explain the observation made on the spring balance in (I). (2 marks)

(iii) When the metal block is fully immersed in the water, the reading on the spring balance is found to be 2.46 N. Determine the:

(I) reading on the weighing balance. (2 marks)

(II) density of the metal. (3 marks)

POWERED BY: WWW.MANYAMFRANCHISE.COM

(c) **Figure 13** shows a hydrometer with a thin stem floating in water in a beaker.

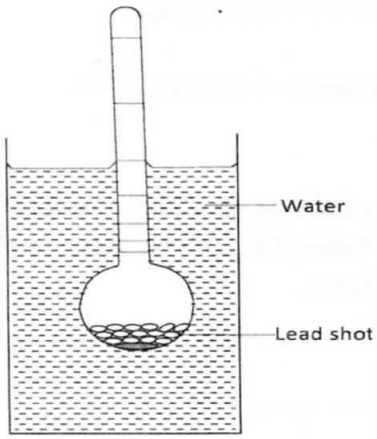

Figure 13

State with a reason what is observed on the hydrometer when the temperature of the water is raised. (2 marks)

POWERED BY: WWW.MANYAMFRANCHISE.COM

4.4.2 Physics Paper 2 (232/2)

SECTION A (25 marks)

*Answer **all** the questions in this section.*

1 State the reason why when a ray of light strikes a mirror at 90^0, the reflected ray travels along the same path as the incident ray. (1 mark)

2 Explain why the image formed in a pin hole camera gets blurred when the hole is enlarged. (2 marks)

3 State the reason why the magnetic field strength of a magnet is greatest at the poles. (1 mark)

4 **Figure 1** shows a cell of e.m.f. 2 V connected in series with a resistor R and a switch S. Voltmeters V_1 and V_2 are connected across the cell and the resistor respectively.

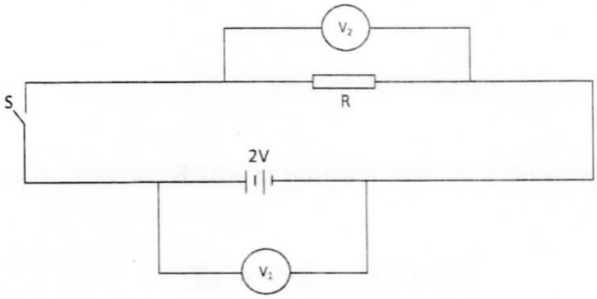

Figure 1

(a) State the reading of V_1 with S open. (1 mark)

(b) With S closed, V_1 reads 1.6 V. State the reading of V_2. (1 mark)

5 **Figure 2** shows the image of an object formed by reflection in a converging mirror. C is the centre of curvature of the mirror.

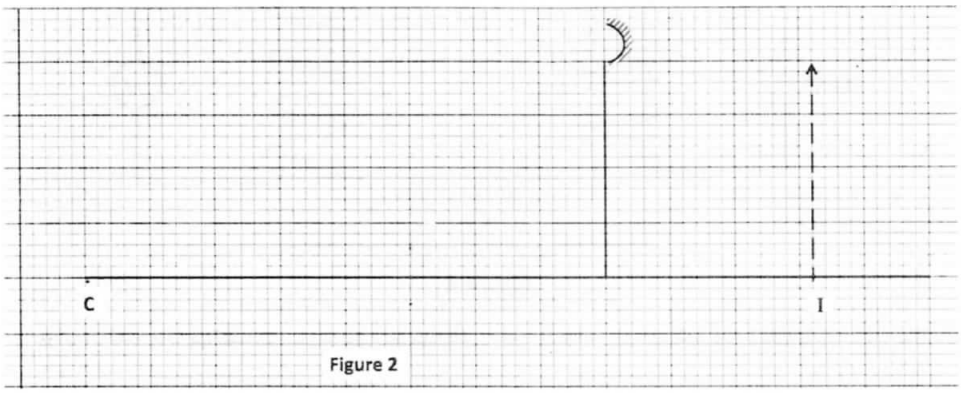

Figure 2

Complete the diagram to show:

(a) how incident rays are reflected to form the image; (2 marks)

(b) the object position. (1 mark)

POWERED BY: WWW.MANYAMFRANCHISE.COM

6 **Figure 3** shows a ray of light passing into a glass prism ABC.

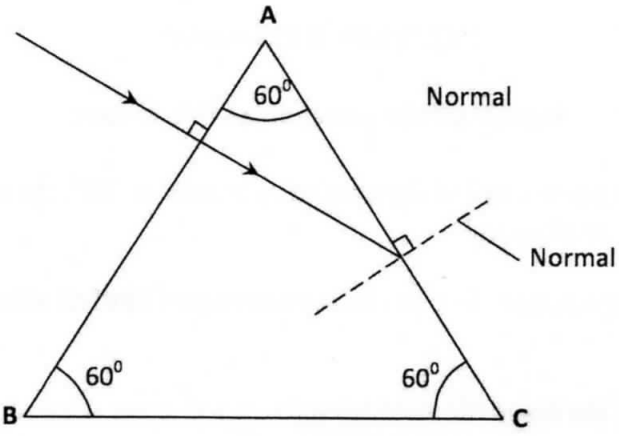

Figure 3

Sketch the path of the ray as it travels from face **AC**. *(critical angle for glass is 42⁰)*

(2 marks)

7 The equation below represents a nuclear reaction in which two deuterium nuclei fuse to form Helium and X.

$$^{2}_{1}H + ^{2}_{1}H \rightarrow ^{3}_{2}He + ^{a}_{b}X.$$

(a) Determine the values of a and b. (1 mark)

(b) Identify X. (1 mark)

8 **Figure 4** shows a simple transformer connected to a 12 V a.c. source and an a.c. voltmeter.

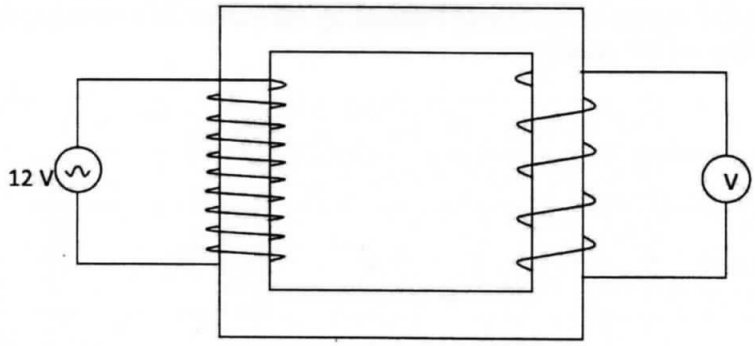

Figure 4

By counting the number of turns in each coil, determine the reading on the voltmeter.

(3 marks)

9 In domestic wiring systems lamps in the lighting circuit are required to be in parallel and not in series. State **two** reasons for this requirement. (2 marks)

POWERED BY: WWW.MANYAMFRANCHISE.COM

10 **Figure 5** shows a narrow beam of x-rays passing between two metal plates in air. The plates are connected in series with a switch, a cell and a milliameter.

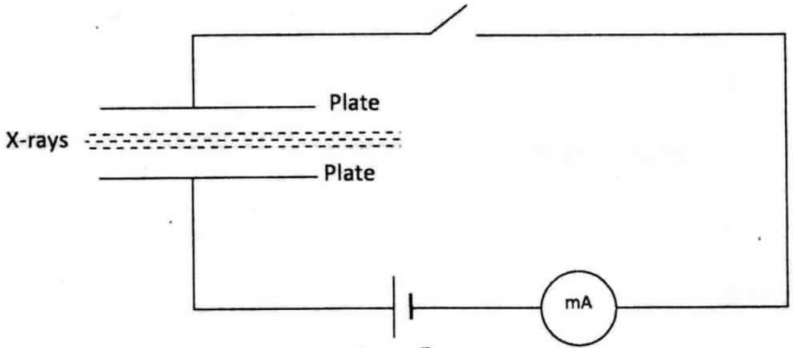

Figure 5

It is observed that when the switch is closed a current flows in the milliameter. Explain this observation. (2 marks)

11 Explain the fact that radiant heat from the sun penetrates a glass sheet while radiant heat from burning wood is cut off by the glass sheet. (2 marks)

12 A photon of ultraviolet light having energy **E** falls on a photoemissive surface whose work function is **T**. Write an expression for the maximum kinetic energy of the resulting photoelectron in terms of **E** and **T**. (1 mark).

13 When a germanium crystal is doped with arsenic, it becomes an N-type semiconductor. Explain how this change occurs. (2 marks)
(Number of electrons in the outermost shell for germanium = 4, Arsenic = 5)

SECTION B (55 marks)

*Answer **all** the questions in this section.*

14 **Figure 6** shows two convex lenses A and B used to produce a magnified virtual image of an object.

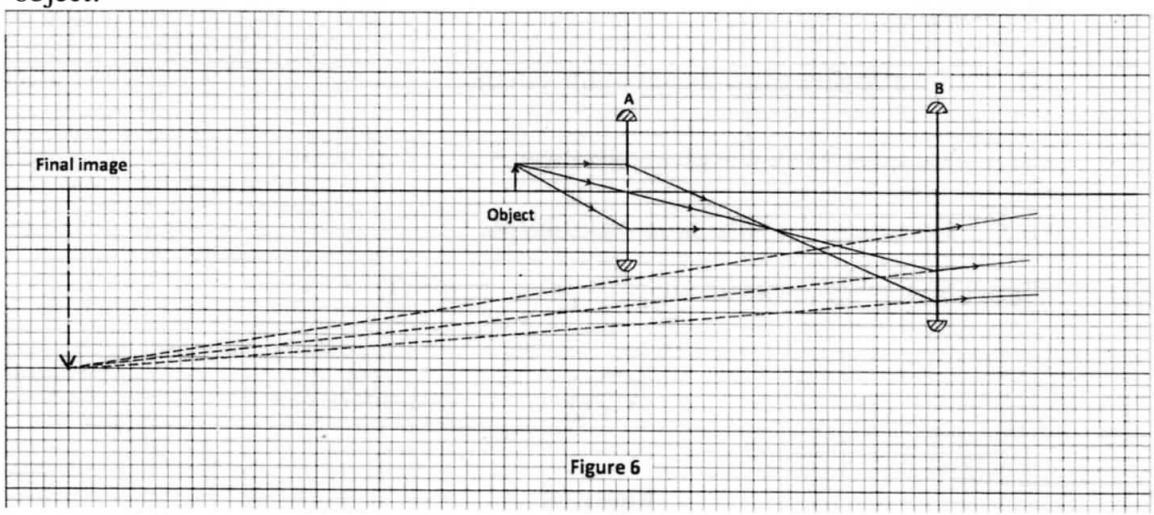

Figure 6

POWERED BY: WWW.MANYAMFRANCHISE.COM

(a) Determine the focal length of lens A. *(Take 1unit to represent 10cm).* (1 mark)

(b) State the function of:

(i) lens A (1 mark)

(ii) lens B (1 mark)

(c) State how the functions in (b) are achieved by:

(i) lens A (1 mark)

(ii) lens B (1 mark)

(d) Determine the magnification produced by:

(i) lens A; (2 marks)

(ii) the whole system. (2 marks)

15 (a) Explain how a positively charged electroscope gets discharged when the cap is touched with a finger. (2 marks)

(b) **Figure 7** shows capacitors **A** and **B** connected in series with a battery of e.m.f 4 V.

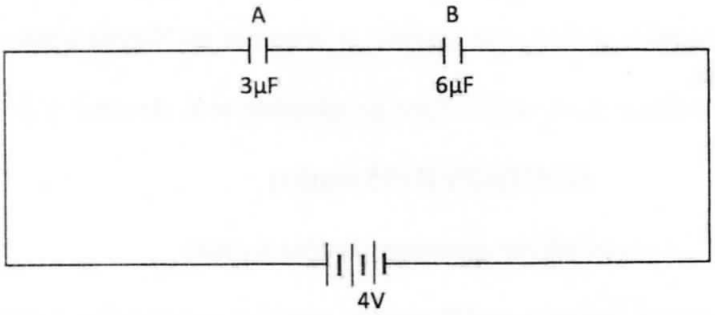

Figure 7

Determine:

(i) the effective capacitance of the circuit. (3 marks)

(ii) the quantity of charge in capacitor **A**. (3 marks)

(iii) the quantity of charge in capacitor **B**. (1 mark)

(c) **Figure 8** shows an isolated negative point charge **Q**.

Figure 8

On the figure, sketch the electric field pattern around the charge. (2 marks)

POWERED BY: WWW.MANYAMFRANCHISE.COM

16 (a) Two points **A** and **B** have a potential difference of **V** volts. **Q** coulombs of charge flow between **A** and **B** for **t** seconds. Determine:

(i) the electrical energy transformed between the two points in terms of **Q**. (1 mark)

(ii) the power transformed in terms of **Q** and **t.** (1 mark)

(iii) show that the power transformed is given by P = IV. (2 marks)

(b) The lighting circuit in a house has 20 lamps each rated 60 W, 240 V. Determine whether a fuse rated 4 A can be used in the circuit when all the lamps are put on. (4 marks)

17 (a) **Figure 9** shows a cathode ray tube in which a beam of electrons is cast on the screen.

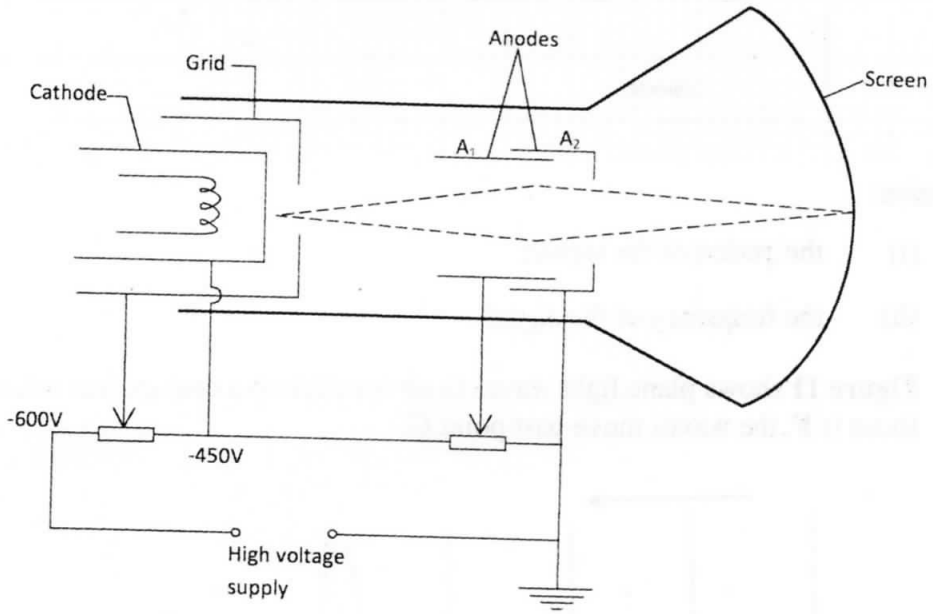

Figure 9

(i) state how the electrons are produced in the tube. (1 mark)

(ii) state how the electron beam is detected. (1 mark)

(iii) State the reason for having a variable potential difference (p.d.) at the:

(I) grid; (1 mark)

(II) anodes. (1 mark)

POWERED BY: WWW.MANYAMFRANCHISE.COM

(b) **Figure 10** shows the waveform of a signal applied at the y-plates of an oscilloscope whose time-base is switched to the scale of 2 milliseconds per centimeter.

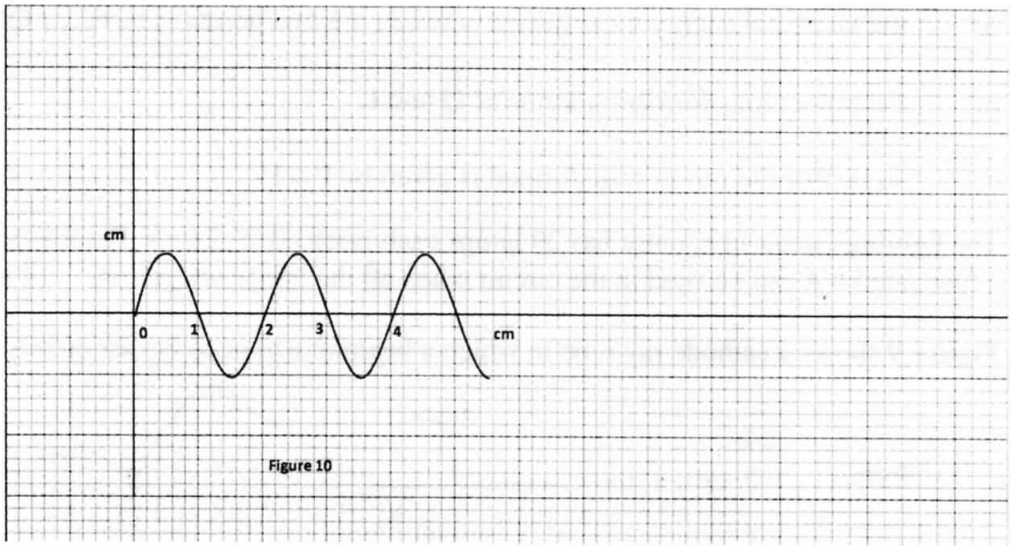

Figure 10

Determine:

(i) the period of the signal; (2 marks)

(ii) the frequency of the signal. (3 marks)

18 (a) **Figure 11** shows plane light waves in air incident on a convex lens whose principal focus is **F**, the waves move past point **G**.

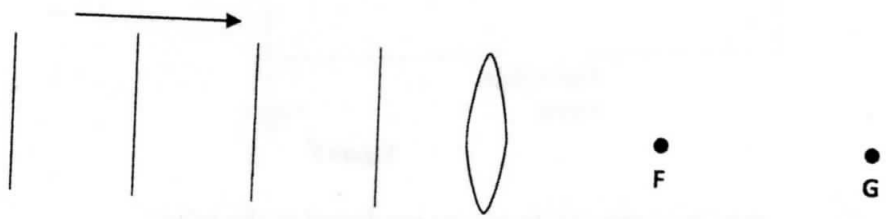

Figure 11

Complete the diagram to show the pattern of the emergent waves between the lens and point **G**. (2 marks)

POWERED BY: WWW.MANYAMFRANCHISE.COM

(b) **Figure 12** shows crests of circular water waves spreading from two points **A** and **B** due to a vibrator. **C** and **D** are points on the surface of the water.

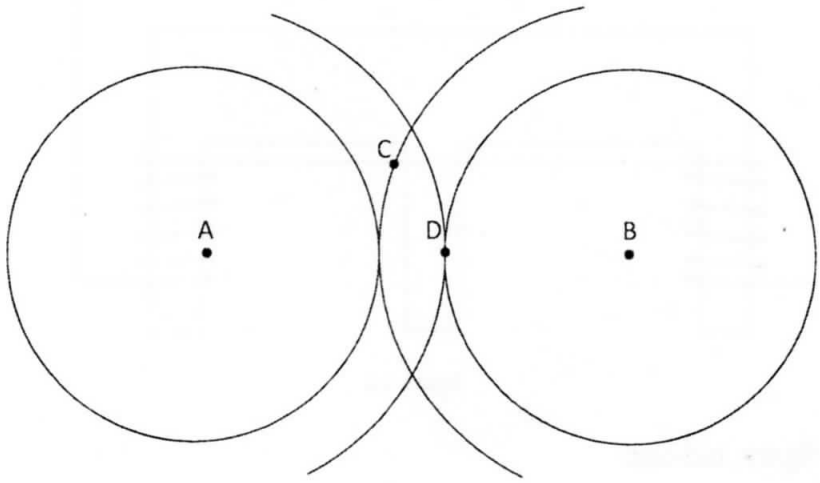

Figure 12

Given that the amplitude of each wave is 5 cm, state with a reason the amplitudes of the waves at point:

(i) **C**; (2 marks)

(ii) **D**. (2 marks)

(c) **Figure 13** shows a standing wave formed when a string of length 1.5 m stretched between two supports is plucked in the middle.

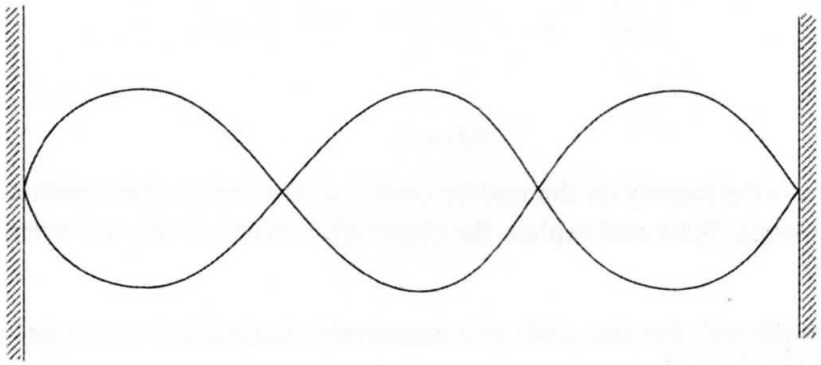

Figure 13

(i) Explain how the standing wave is formed. (3 marks)

(ii) Determine the wavelength of the standing wave. (1 mark)

POWERED BY: WWW.MANYAMFRANCHISE.COM

19 (a) **Figure 14** shows an E shaped steel block being magnetised by a current through two coils in series.

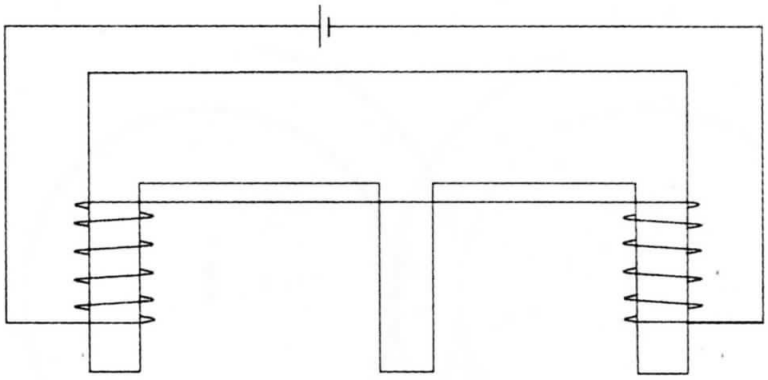

Figure 14

On the figure, indicate

(i) the north and south poles of the resulting magnet (1 mark)

(ii) the complete magnetic field pattern between the poles. (1 mark)

(b) **Figure 15** shows the permanent magnet made in part (a) above.

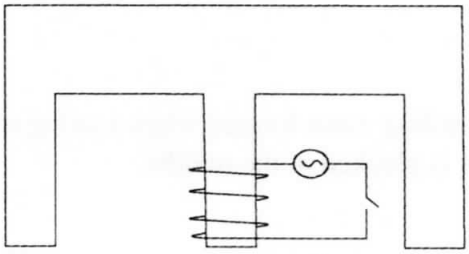

Figure 15

A coil wound loosely on the middle limb is connected in series with a low voltage a.c. and a switch. State and explain the observation made on the coil when the switch is closed. (2 marks)

(c) In a simple cell, the zinc plate gets negatively charged and the copper plate gets positively charged.

(i) Name the electrolyte in the cell. (1 mark)

(ii) Explain how:

(I) Zinc gets negatively charged. (1 mark)

(II) Copper gets positively charged (1 mark)

(iii) State what constitutes the current when a wire is used to connect the zinc plate and the copper plate externally. (1 mark)

POWERED BY: WWW.MANYAMFRANCHISE.COM

4.4.3 Physics Paper 3 (232/3)

Question 1 . *This question consists of* ***two*** *parts* ***A*** *and* ***B****; attempt both parts.*

PART A

You are provided with the following:
- a pendulum bob
- a stop-watch
- two metre rules
- two retort stands, two bosses and two clamps.
- some thread.

Proceed as follows:

(a) Clamp one metre rule horizontally on the two stands so that the graduations are in a vertical plane. Suspend the pendulum bob from the metre rule with two pieces of thread so that the length of each thread from the point of support on the metre rule to the pendulum bob is 50 cm. See **figure 1**. ***The length of each thread will remain 50 cm throughout the experiment. The height of the metre rule above the bench should be at least 65 cm.***

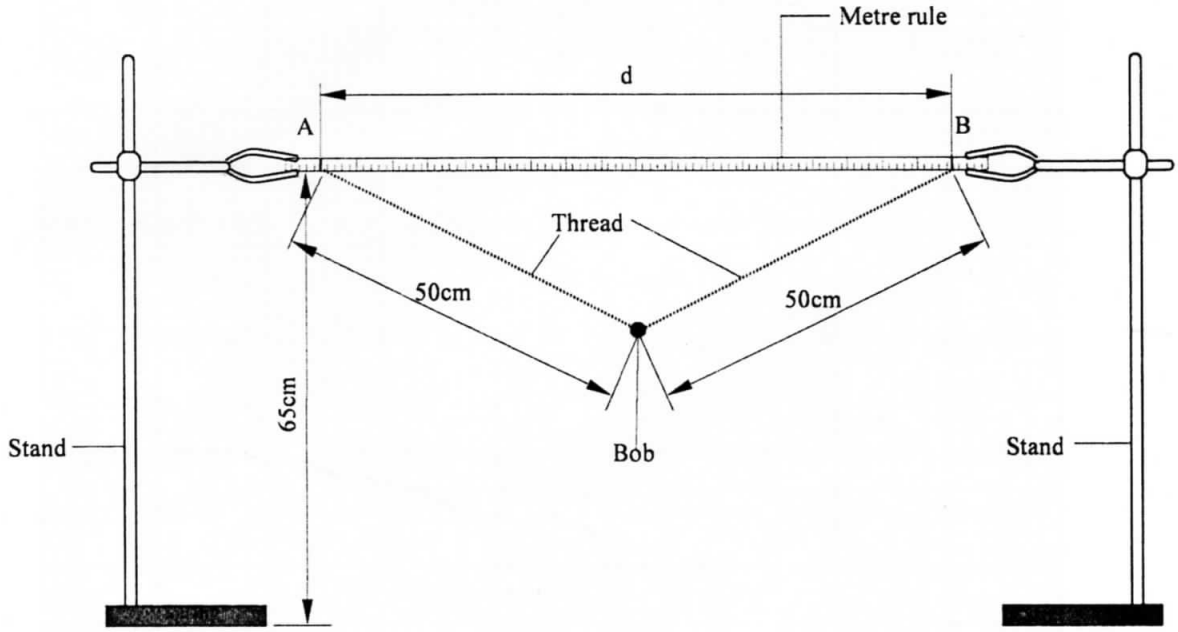

Figure 1

(b) Set the distance d between **A** and **B** to be 70 cm. Displace the pendulum bob slightly in a plane perpendicular to the length of the metre rule and release it so that it oscillates in that plane. Measure and record in **table 1** the time t for 20 oscillations.

POWERED BY: WWW.MANYAMFRANCHISE.COM

Powered By: 0728 450 425 Manyam Franchise

(c) Repeat the procedure in (b) for other values of d shown in **table 1**. Complete the table.

Table 1

Distance d (cm)	70	60	50	40
time t for 20 oscillations (s)				
Period T =				
T^4 (s^4)				
d^2 (cm^2)				

(4 marks)

(d) (i) Plot a graph of T^4 (y - axis) against d^2. (4 marks)

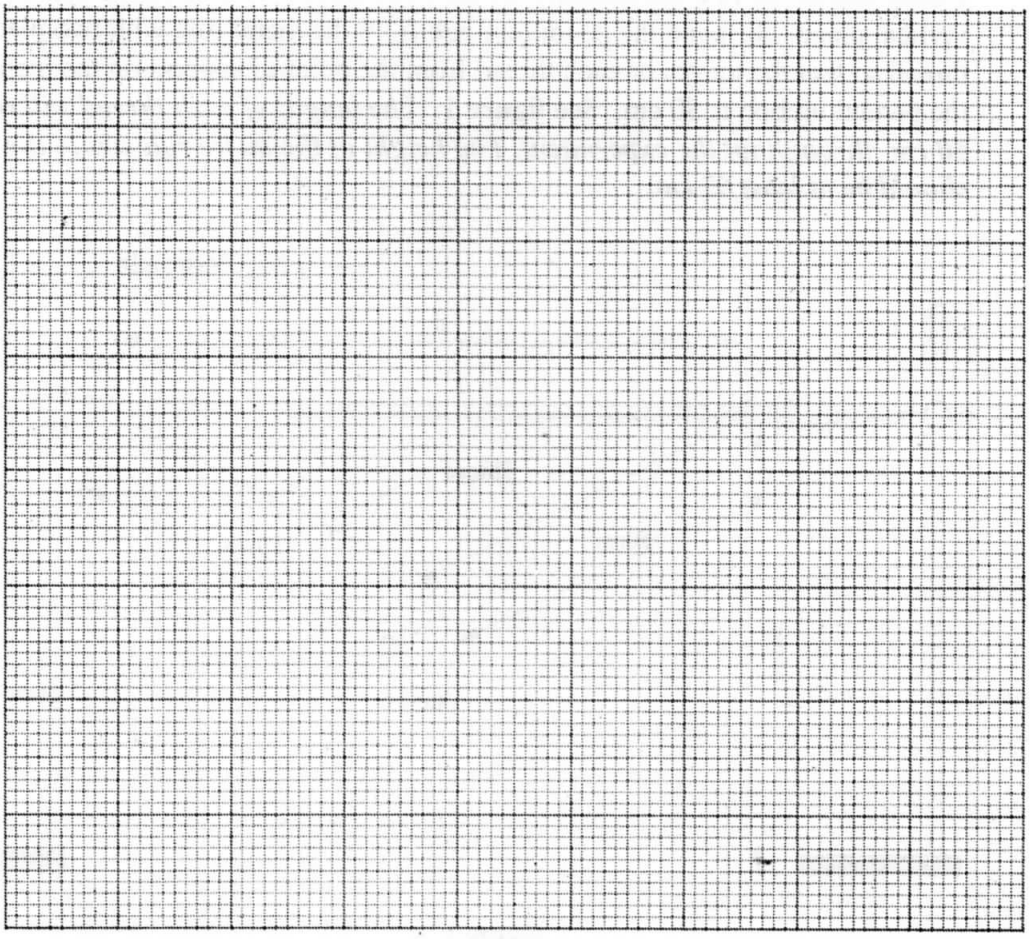

(ii) Determine the slopes S of the graph. (2 marks)

(iii) Given that $S = \frac{-4\pi^4}{K^2}$, determine the value of K. (2 marks)

POWERED BY: WWW.MANYAMFRANCHISE.COM

PART B

You are provided with the following:
- two stands, two clamps and two bosses.
- one meter rule
- one Bar magnet
- a piece of thread
- weighing balance (to be shared)
- stop watch

Proceed as follows.

(e) Using the meter rule measure the length L and breadth b for the magnet. (b is the second largest dimension of the magnet).

L = ... m

b = ... m (1 mark)

(f) Use the balance to measure the mass M of the magnet.

M = ... kg. (1 mark)

(g) Determine P given that $P = \frac{M}{3}(L^2 + b^2)$. (2 marks)

(h) Clamp the meter rule between the two resort stands. Using a piece of thread suspend the bar magnet from the centre of the metre rule so that its length and breadth are both in a horizontal plane as shown in **figure 2**.

Keep away all unnecessary magnetic materials including voltmeter form this experimental set up.

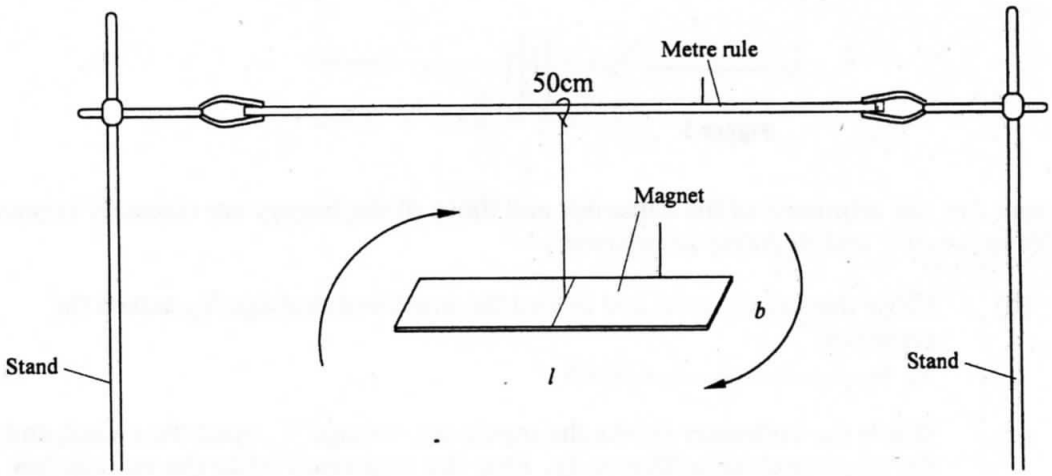

(i) (I) Displace one end of the magnet through a small angle and let it oscillate about a vertical axis through its centre as shown by the arrows. Measure the time t for 10 oscillations. (1 mark)

(a) t = ... s

POWERED BY: WWW.MANYAMFRANCHISE.COM

(II) Determine the period T of the oscillations. (1 mark)
(III) Determine the constant G given that $T = 2\pi\sqrt{\frac{P}{G}}$. (2 marks)

Question 2

*This question consists of **two** parts **A** and **B**, attempt both parts.*

PART A

You are provided with the following

- a voltmeter
- a capacitor
- a switch
- a stop watch
- five connecting wires
- two cells and a cell holder

Proceed as follows:

(a) Connect the circuit as shown in **figure 3**.

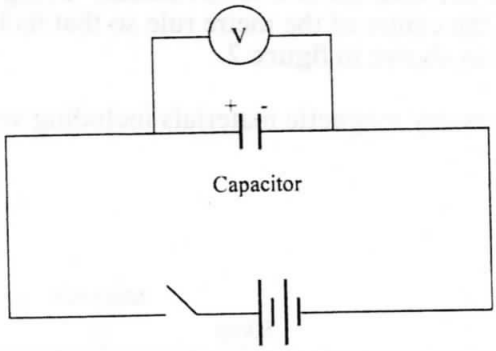

Figure 3

Make sure that the terminals of the capacitor and those of the battery are correctly connected, *(positive to positive and negative to negative).*

(b) Close the switch, read and record the maximum voltage V_o, across the capacitor.
V_o =.....volts (1 mark)

(c) While the voltmeter shows the maximum voltage V_o, open the switch and start the stop watch simultaneously. Stop the stopwatch when the voltage has dropped from V_o to 2.5 V. Read and record in **table 2** the time taken.

(d) Reset the stopwatch and close the switch. Repeat the procedure in (c) to measure and record the time taken for the voltage to drop from V_o, to each of the other values shown in **table 2**.

POWERED BY: WWW.MANYAMFRANCHISE.COM

Powered By: 0728 450 425 Manyam Franchise

Table 2

Voltage (V)	2.5	2.25	2.0	1.75	1.50	1.25
Time, t (s)						

(3 marks

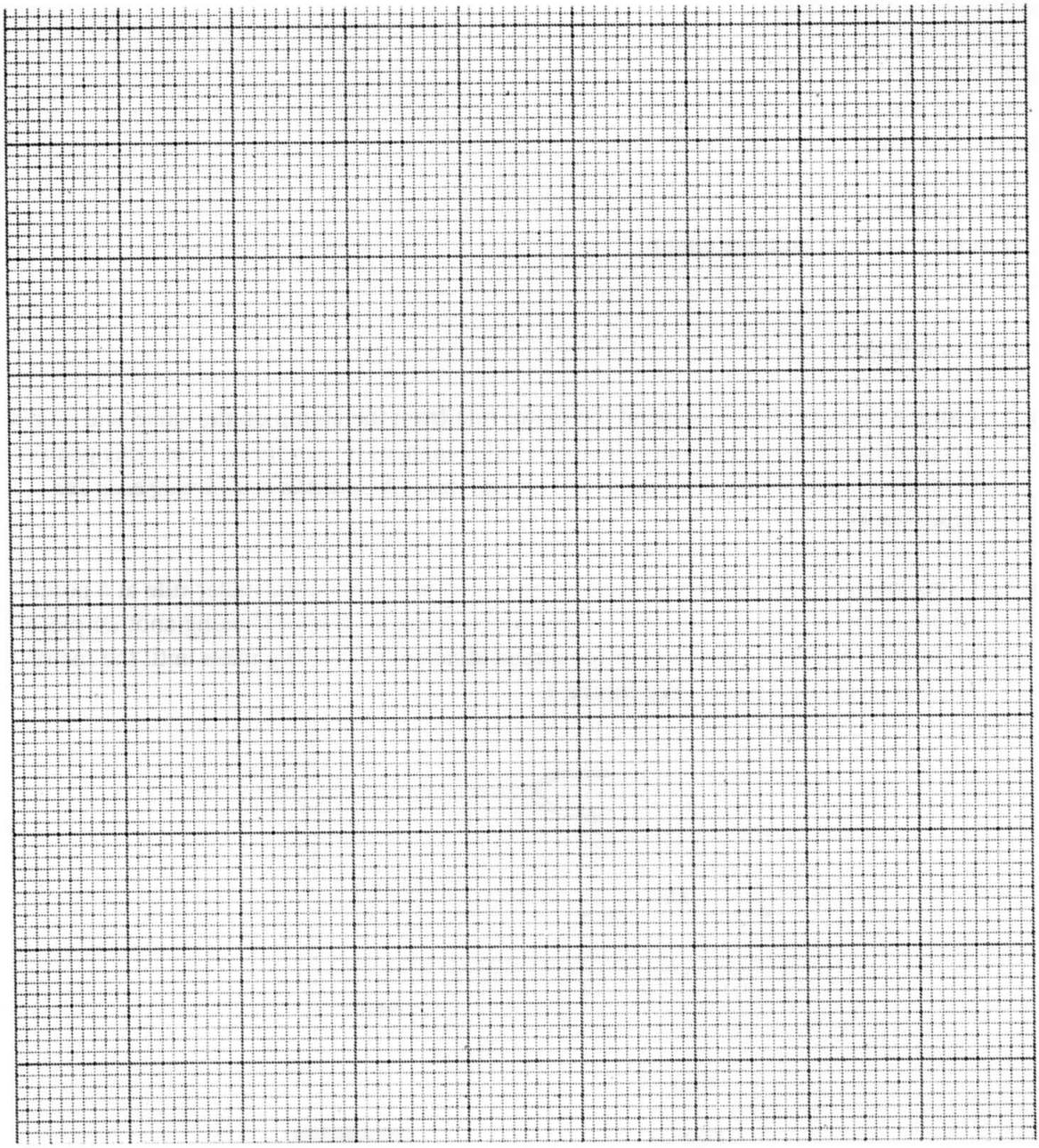

(e) (i) On the grid provided, plot a graph of Voltage V (y-axis) against time t, (4 marks)

(ii) Use the graph to determine the time **t** at which $V = \frac{V_o}{2}$

t =..... seconds (1 mark)

POWERED BY: WWW.MANYAMFRANCHISE.COM

(f) Determine the resistance R of the voltmeter given that
$t = 0.693CR$ where C is the capacitance of the capacitor.

(1 mark)

PART B

You are provided with the following:
- a triangular glass prism
- a metre rule
- a 50 g mass
- some hot water
- some cold water
- some thread
- a thermometer
- one stand, one boss and one clamp
- a beaker

Proceed as follows:

(g) Using a piece of thread suspend the metre rule from the clamp on the stand and adjust the position of the thread until the metre rule balances horizontally. Note this position, O of the thread. ***(This position of the thread must be maintained throughout the experiment).***

(h) Using another piece of thread suspend the glass prism from the meter rule at a point 35 cm from O. Suspend the 50 g mass on the opposite side of O using another piece of thread. Adjust the position of the thread attached to the 50 g mass until the metre rule balances once more. **See figure 4**.

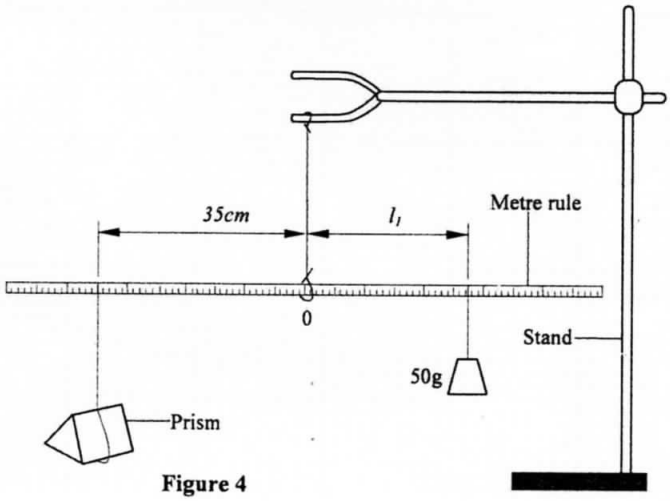

Figure 4

(i) Determine the distance l_1 between O and the point of support of the 50 g mass.

l_1 = ... cm (1 mark)

(ii) Use the principle of moments to determine the weight W_1 of the prism in air.
(Take $g = 10\ N\ kg^{-1}$) (1 mark)

POWERED BY: WWW.MANYAMFRANCHISE.COM

(i) Put cold water into the beaker (approximately three quarter ($^3/_4$ full). With the glass prism still at 35 cm from O, determine the distance l_2 of the 50 g mass at which the rule balances when the prism is fully submerged in the cold water. **See figure 5.**

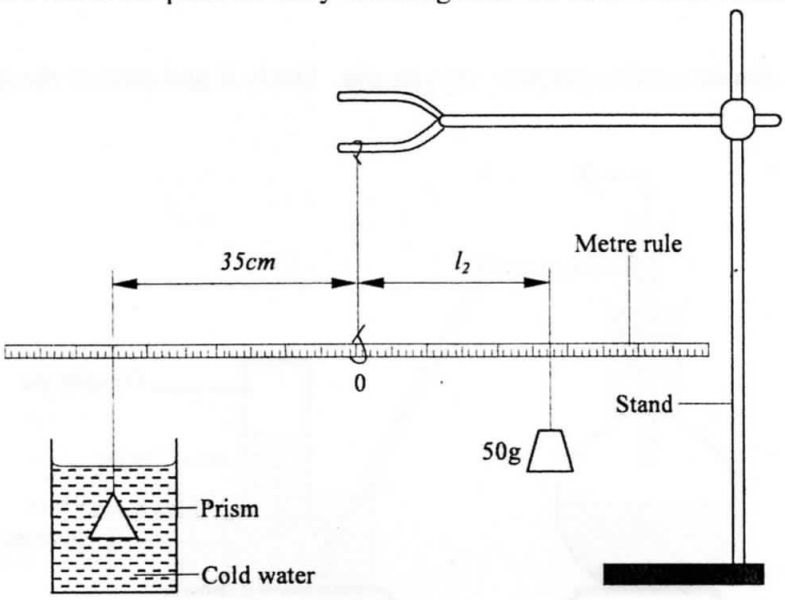

Figure 5

(I) l_2 = ...cm (1 mark)

(II) Determine the weight W_2 of the prism in the cold water. (1 mark)

(j) Measure and record the temperature T_1 of the cold water when the system is balanced.

T_1 = ...°C (1 mark)

(k) Now pour out the cold water and replace it with hot water. Balance the metre rule with the prism fully submerged in hot water. ***Ensure that the prism is still supported at 35 cm from 0.***

(i) Determine the distance l_3 of the point of support of the 50 g mass when the prism is submerged in hot water.

l_3 = ... cm. (1 mark)

(ii) Measure and record the temperature T_2 of the hot water.

T_2 =.....°C (1 mark)

(iii) Determine the weight W_3 of the prism in hot water. (1 mark)

(l) Determine the constant k for the water given that:

$$k = \frac{(w_1 - w_2) - (w_1 - w_3)}{(w_1 - w_3)(T_2 - T_1)}$$ (2 marks)

POWERED BY: WWW.MANYAMFRANCHISE.COM